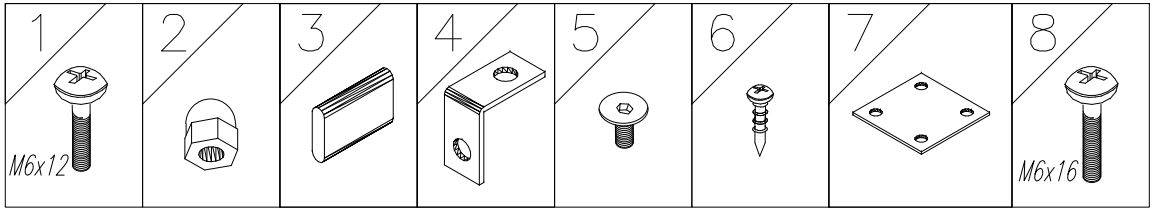

BLW...

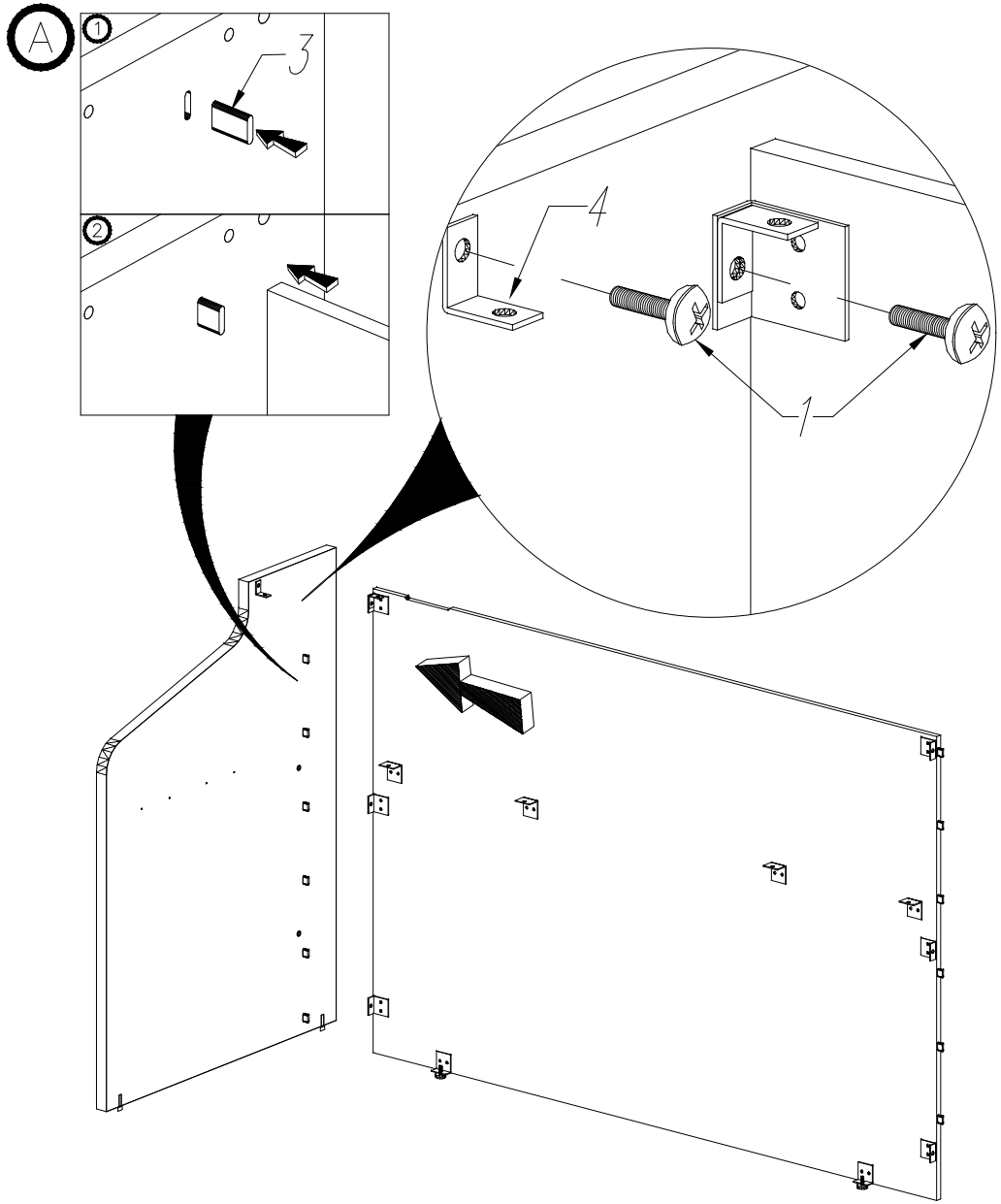

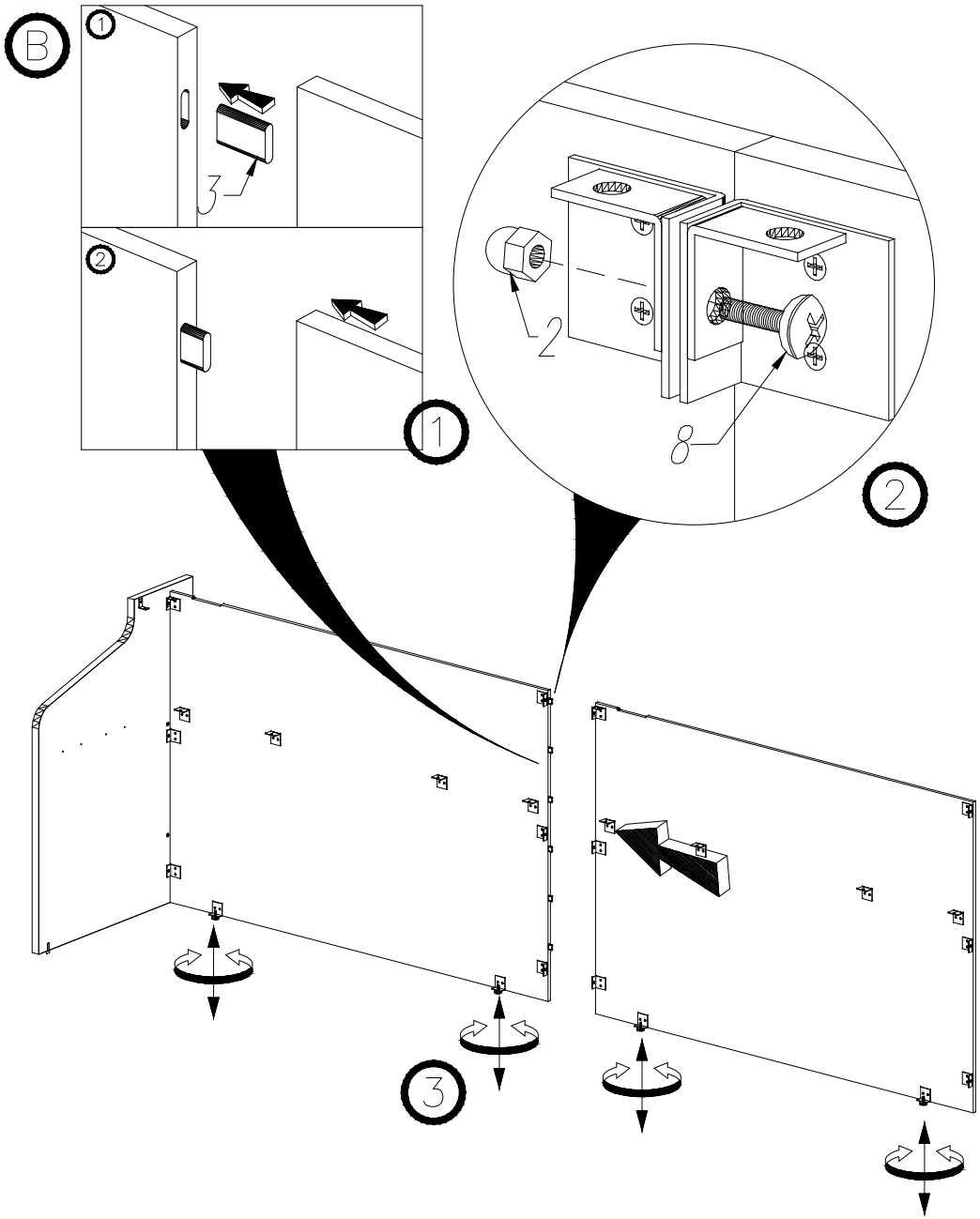

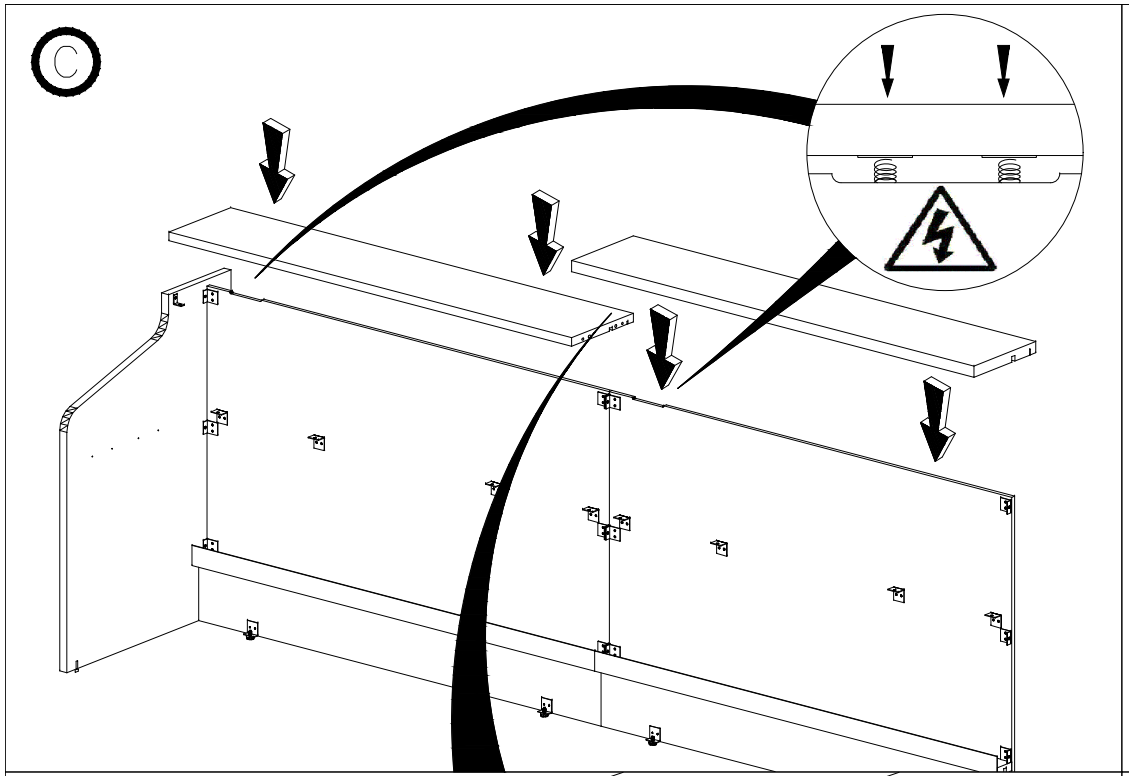
C

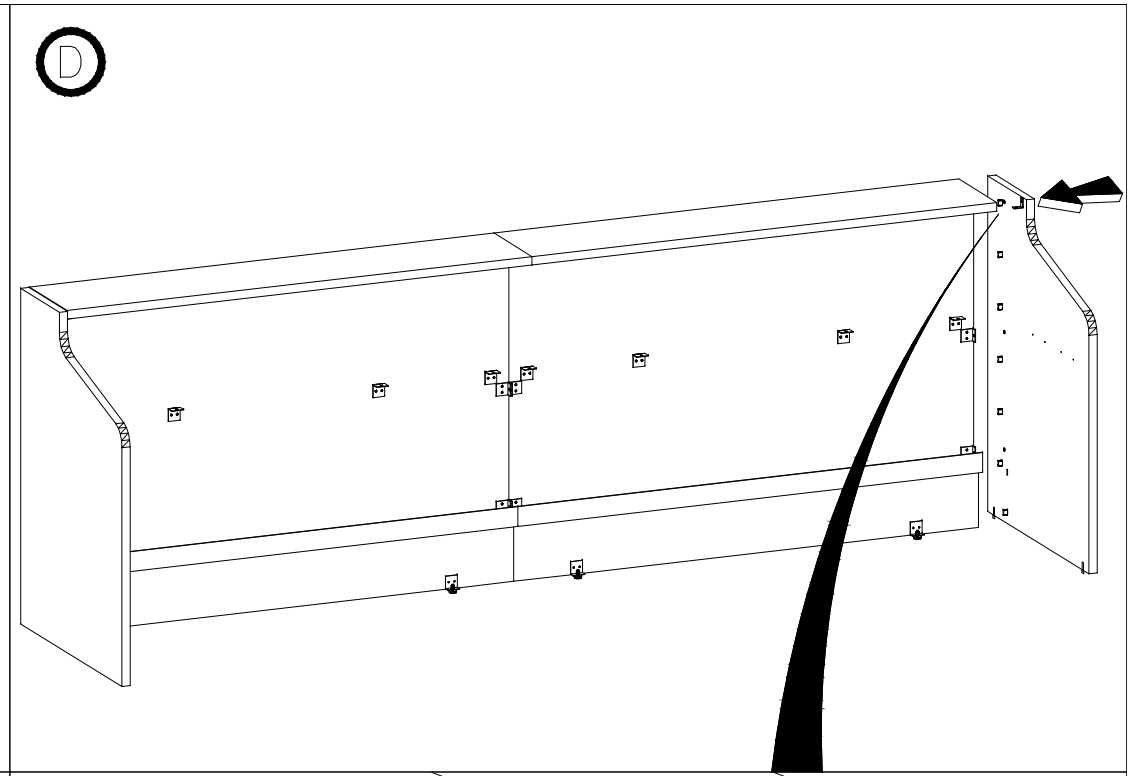
D

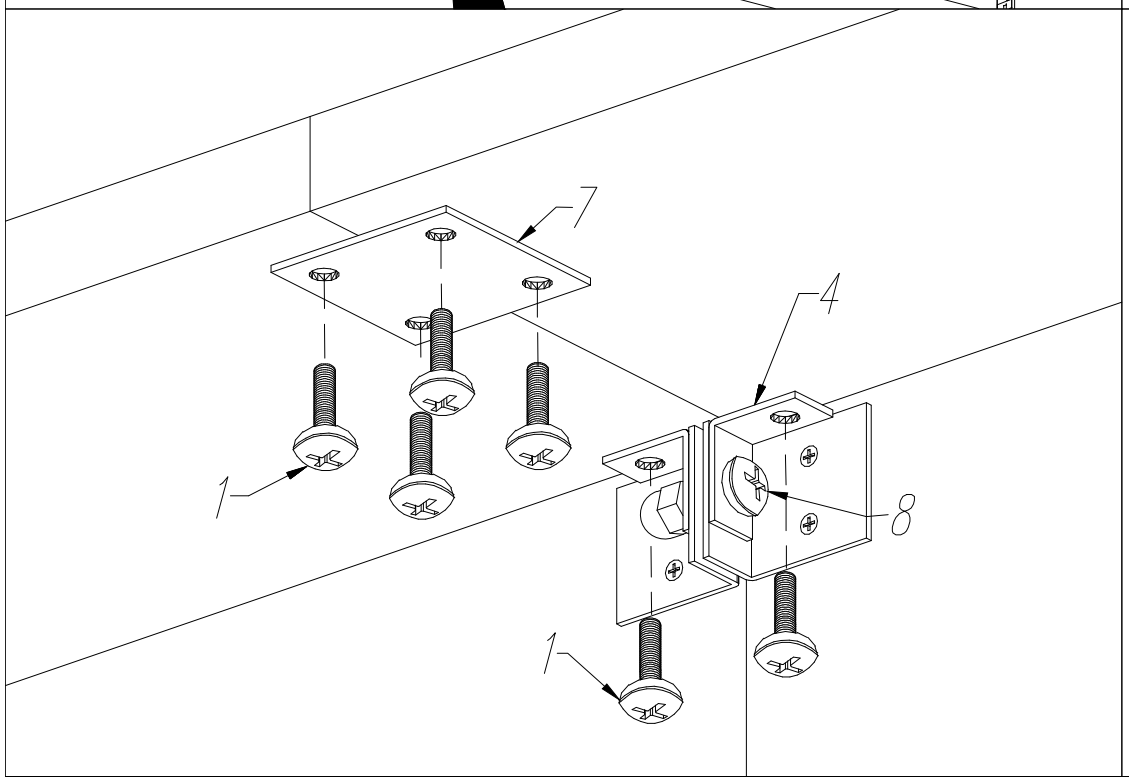
7
4
1
8
1

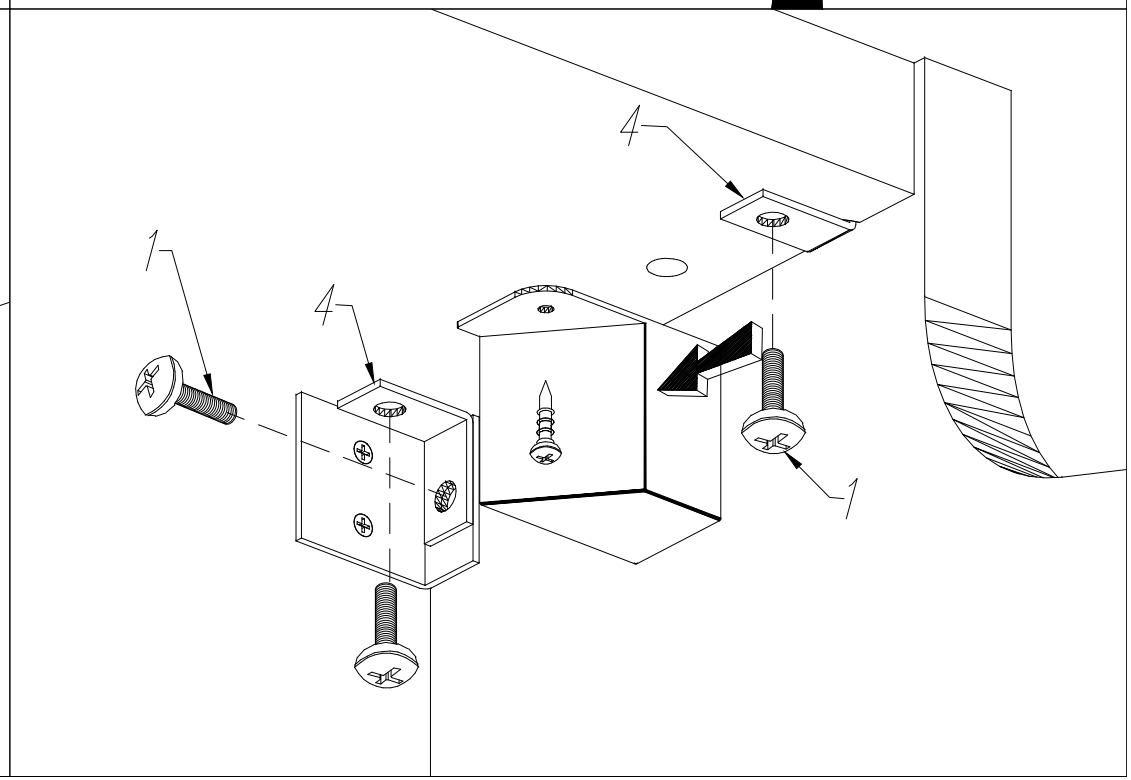
4
1
4
1

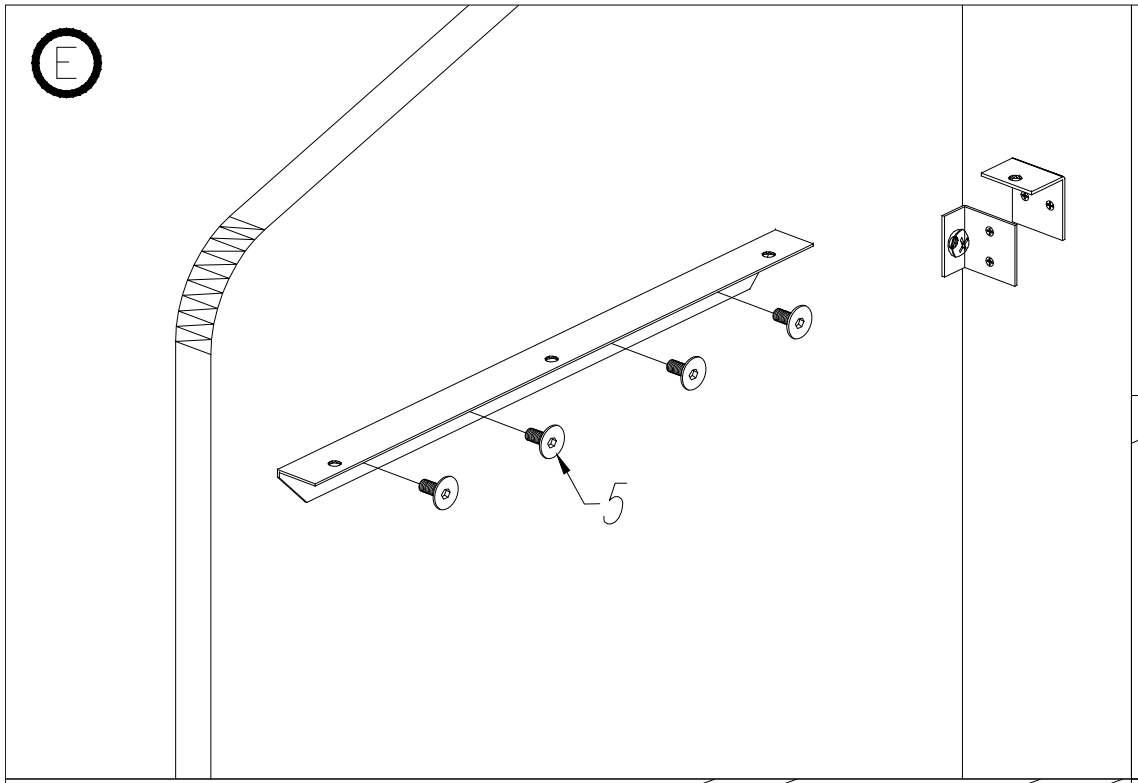
E
5

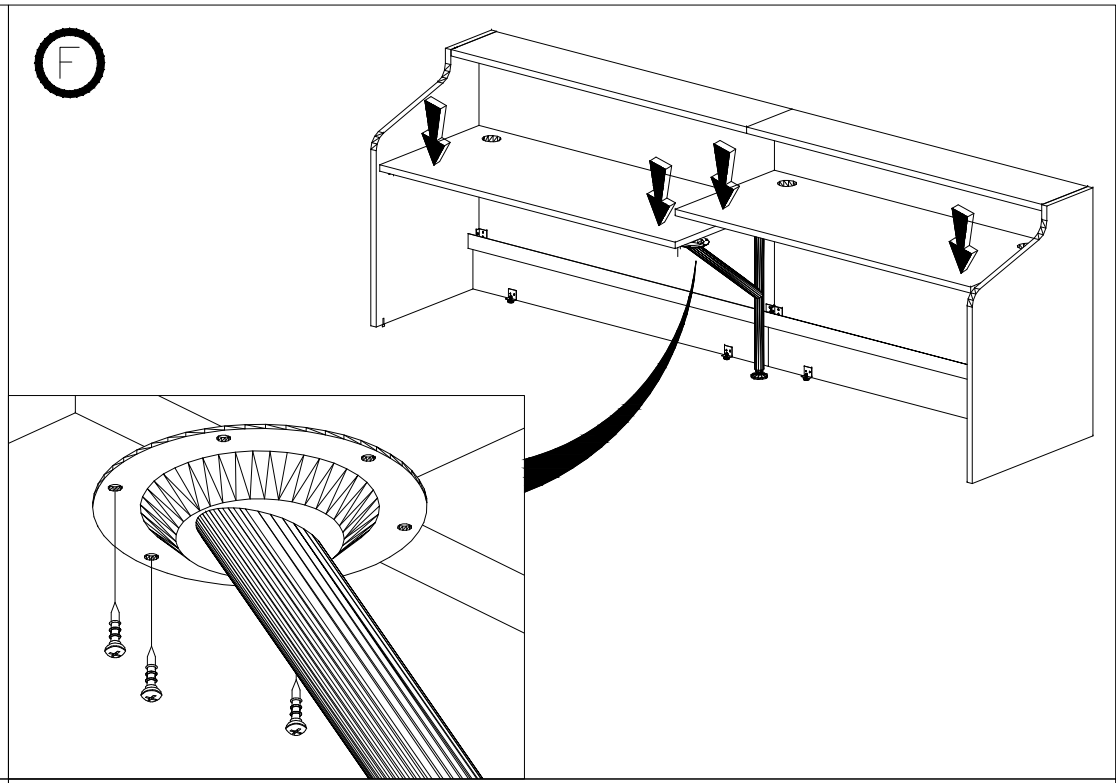
F

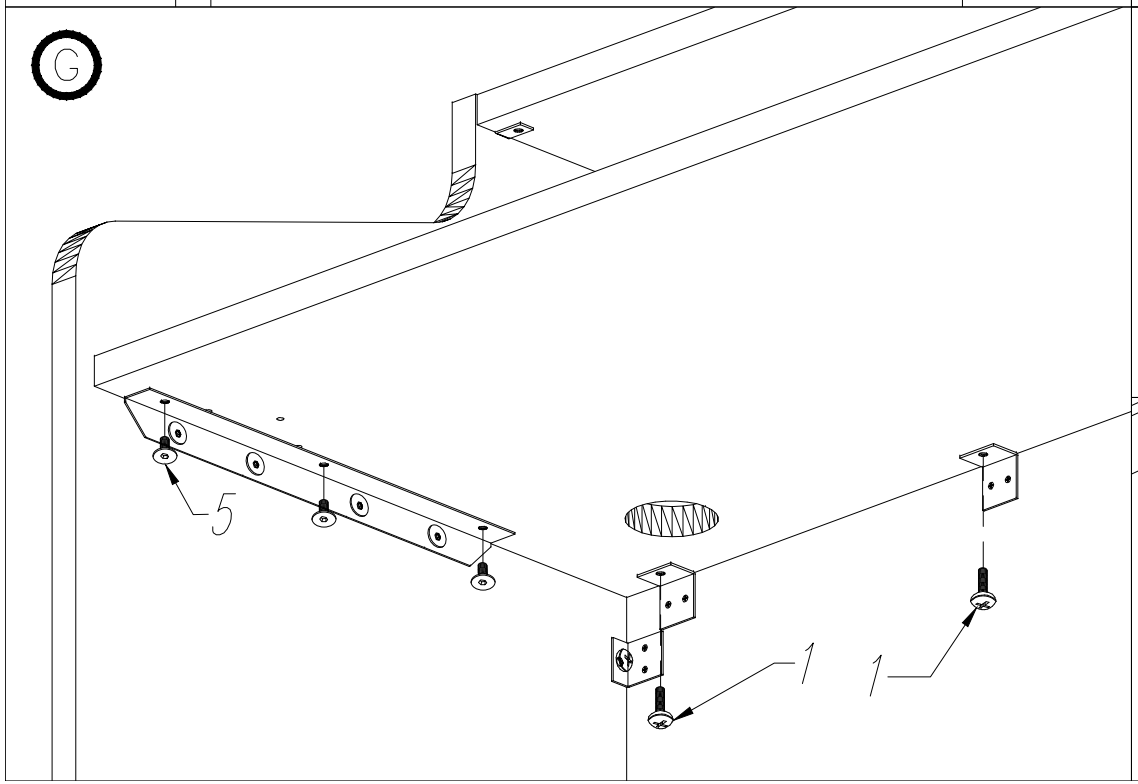
G
5
1
1

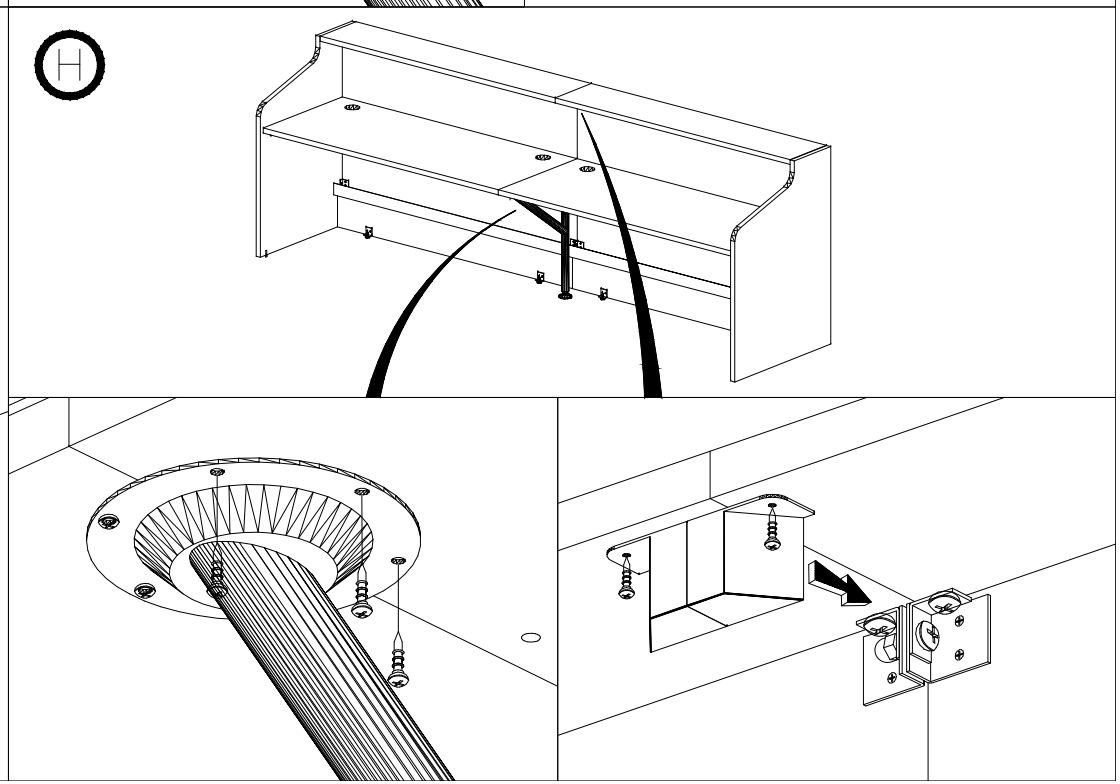
H

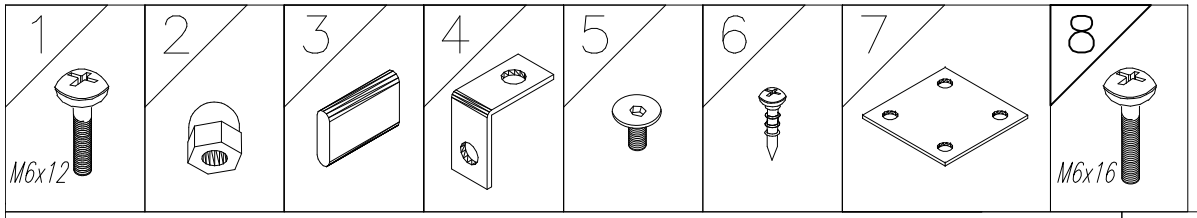

LV...

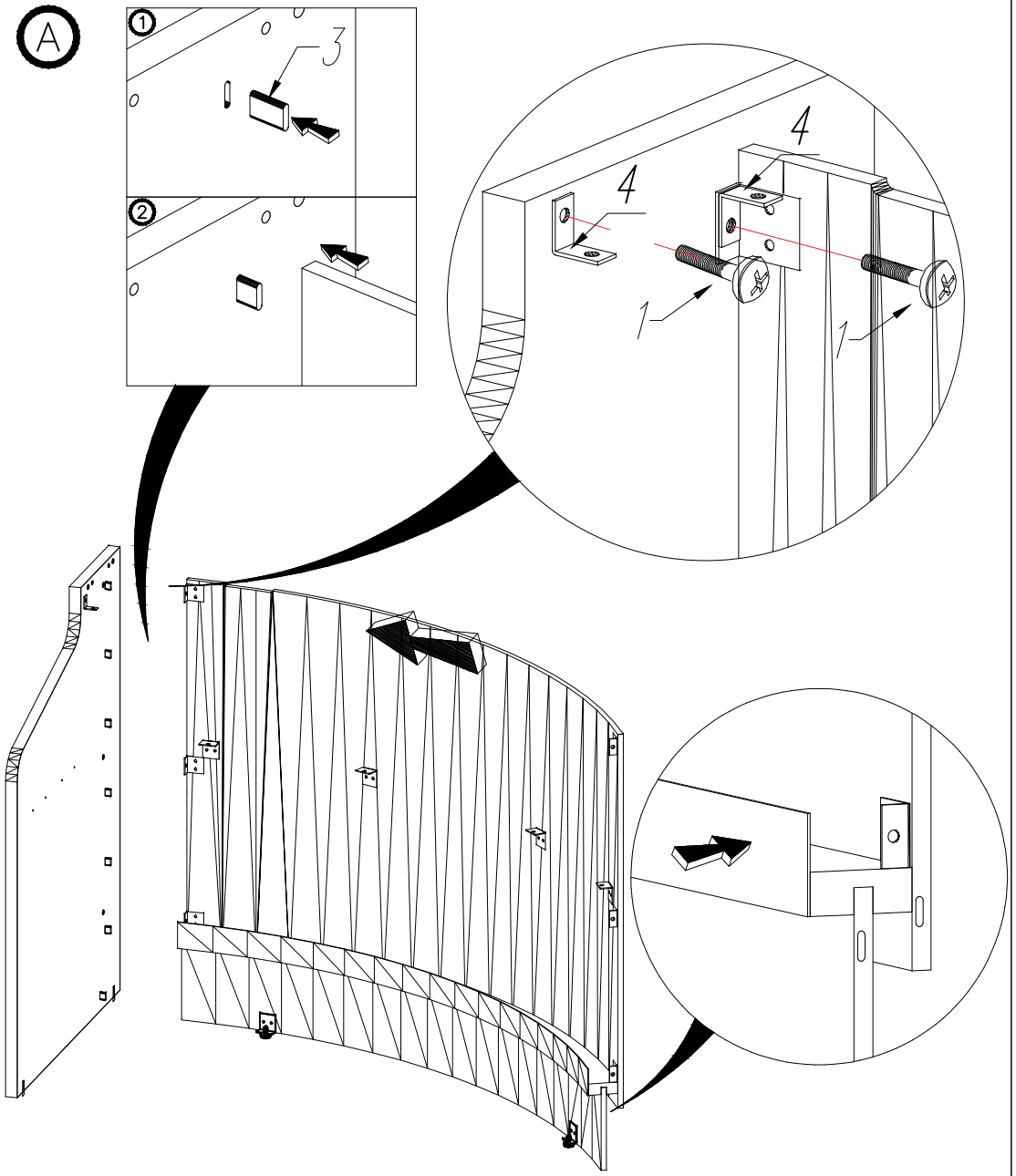

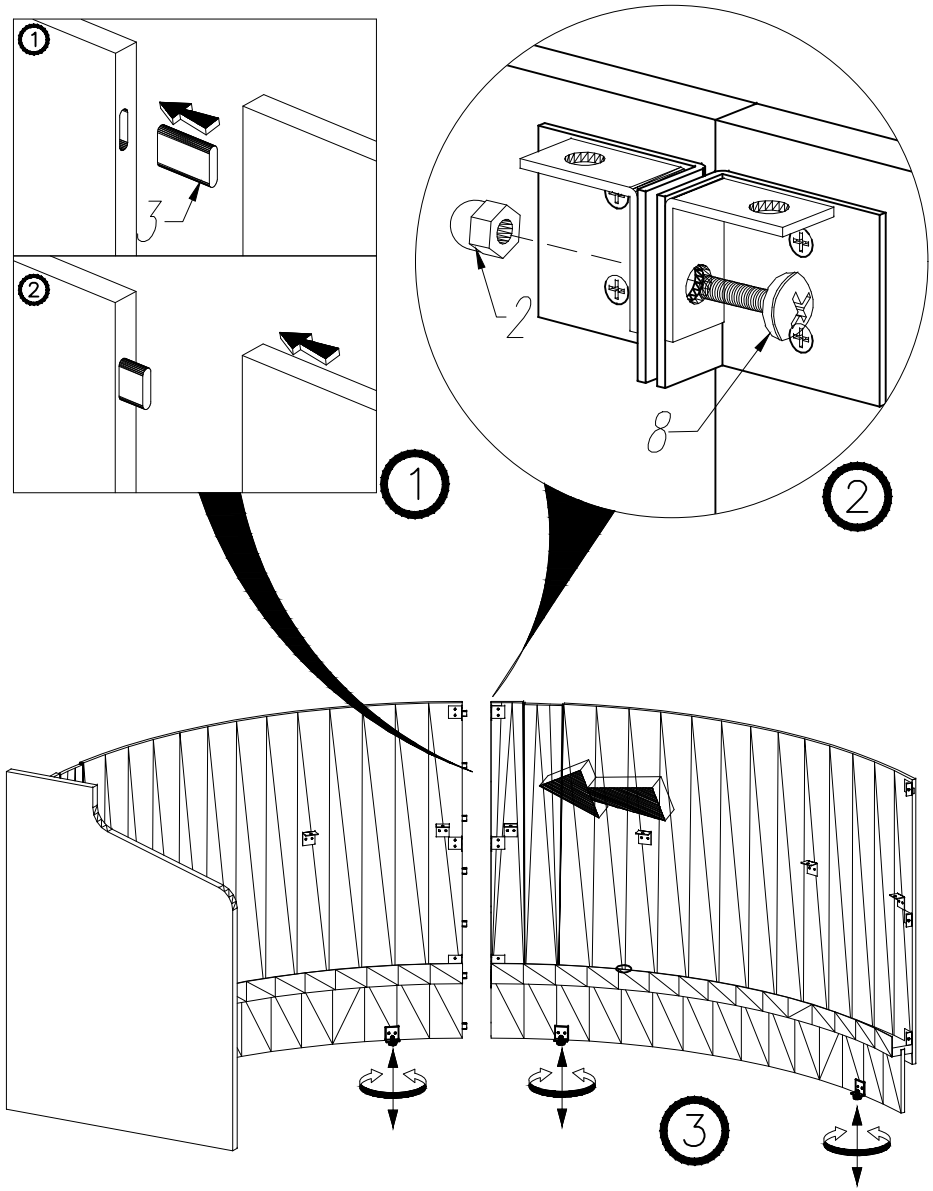

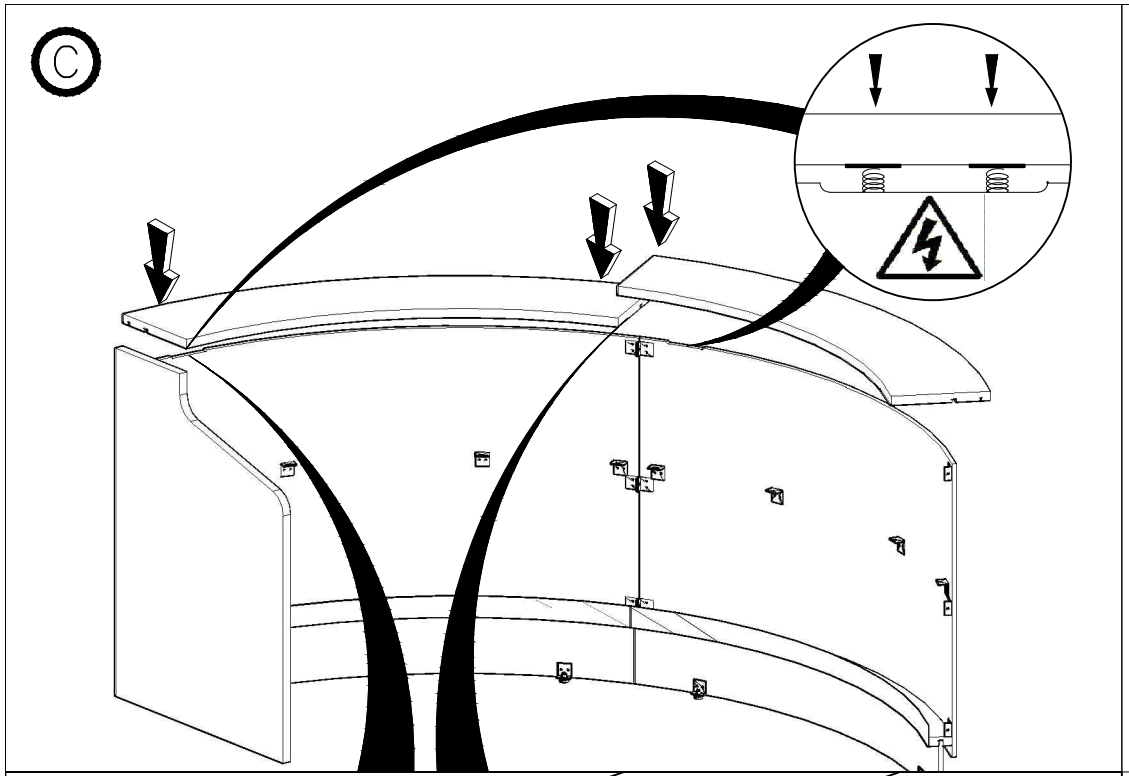
C

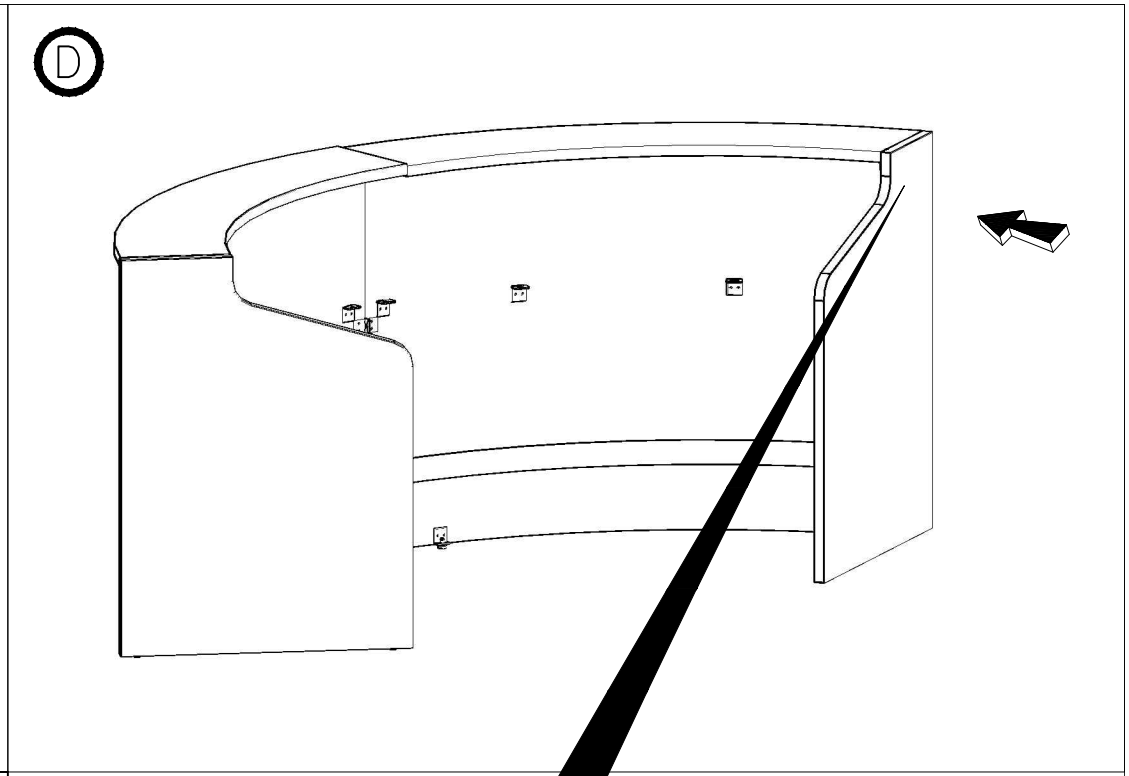
D

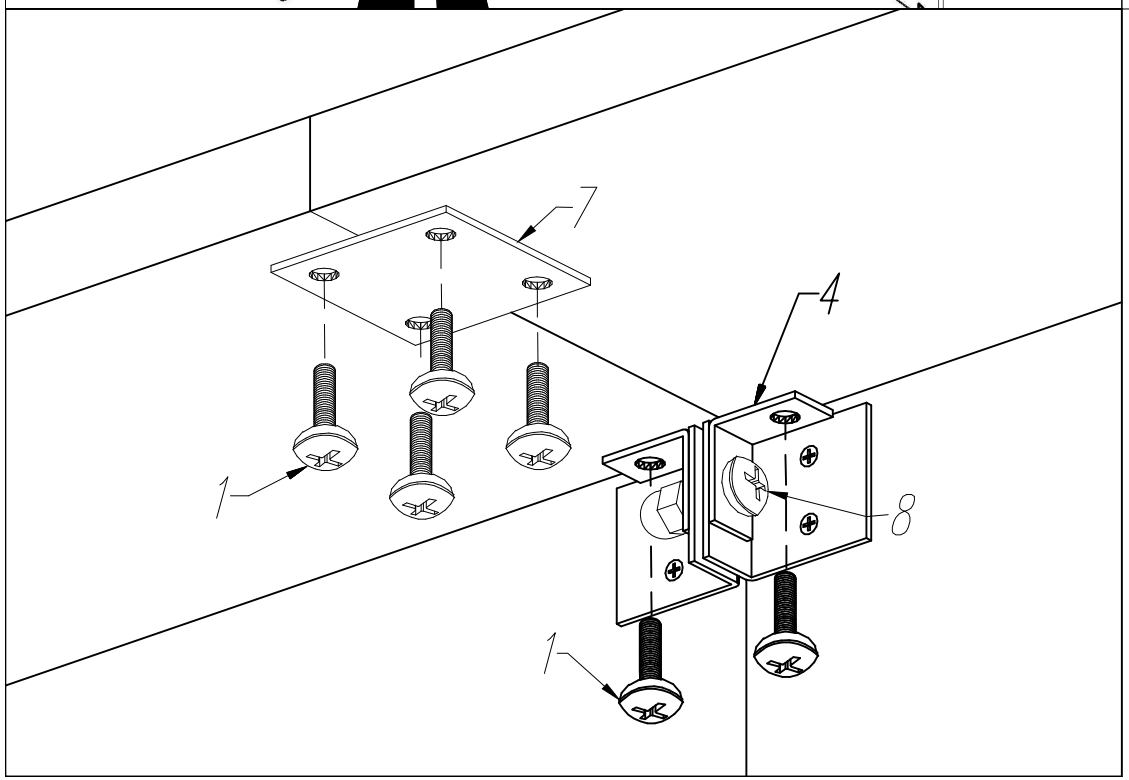
7
4
1
8
1

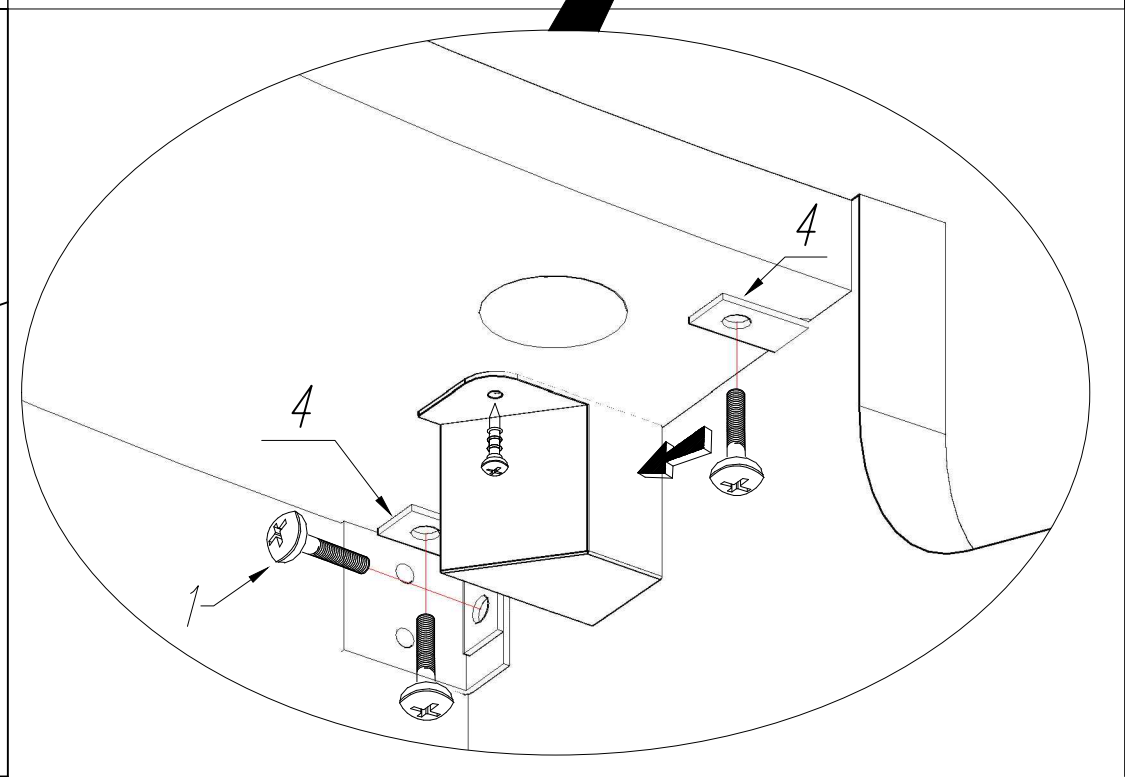
4
4
1

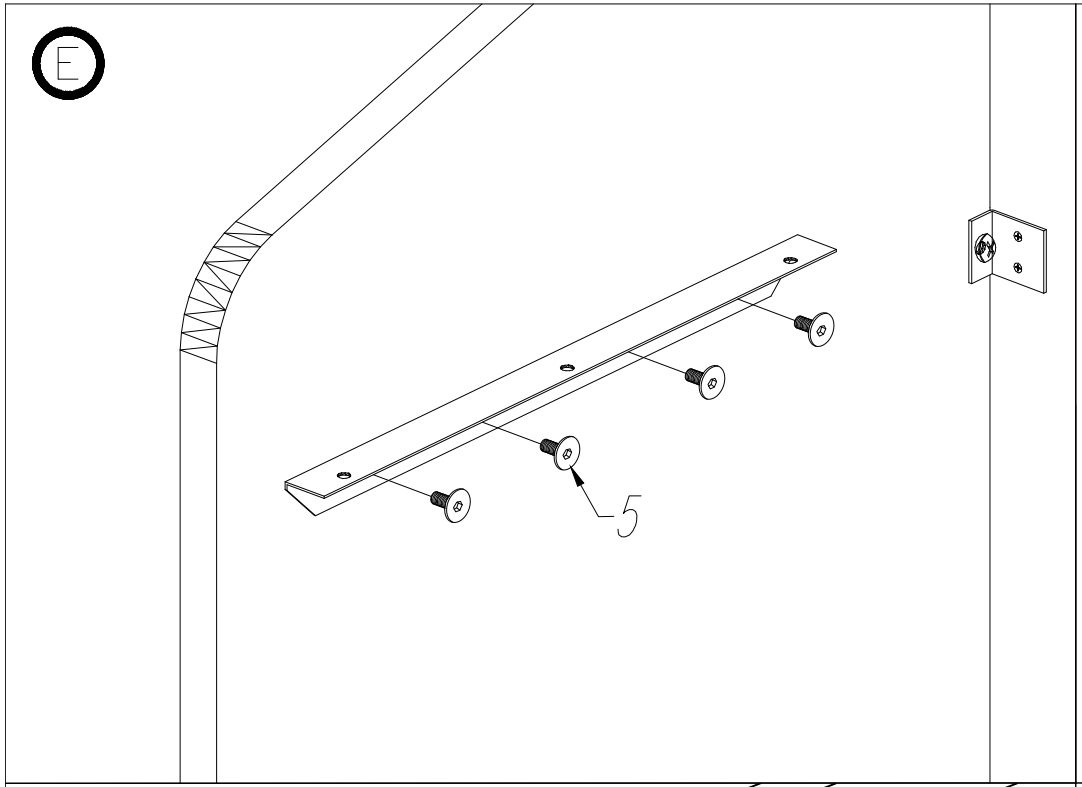
E
5

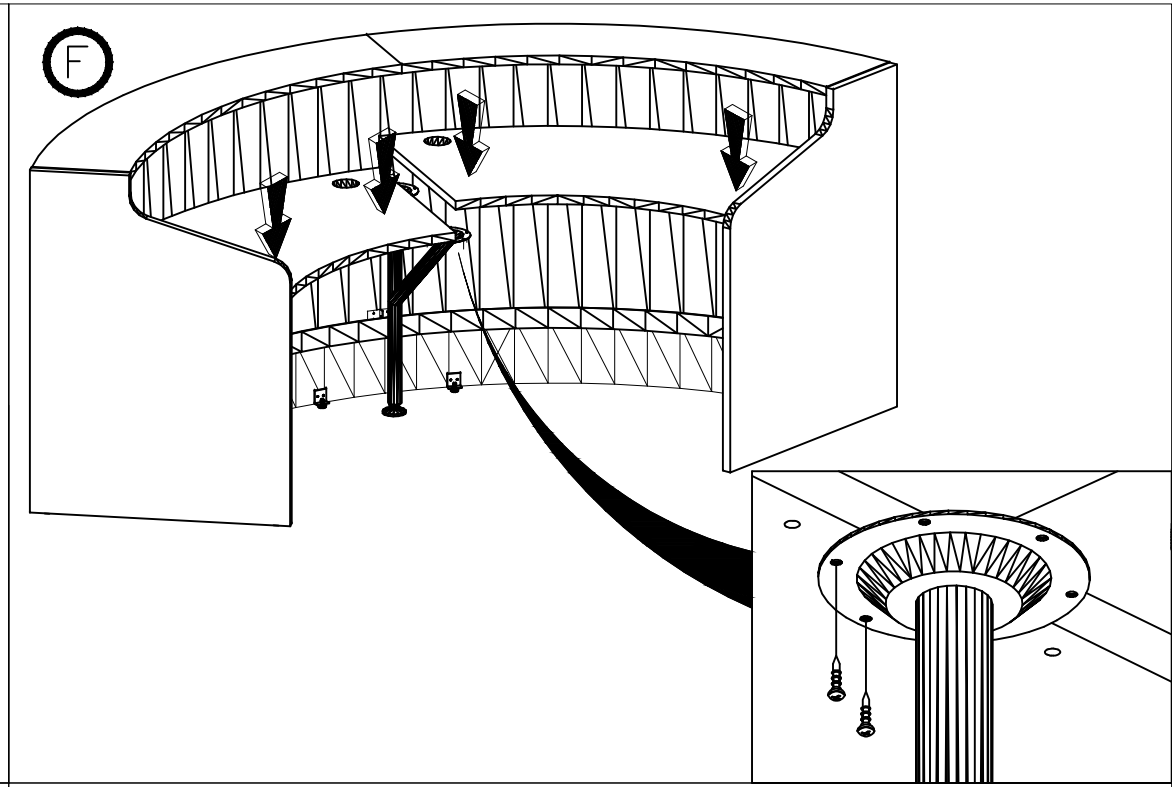
F

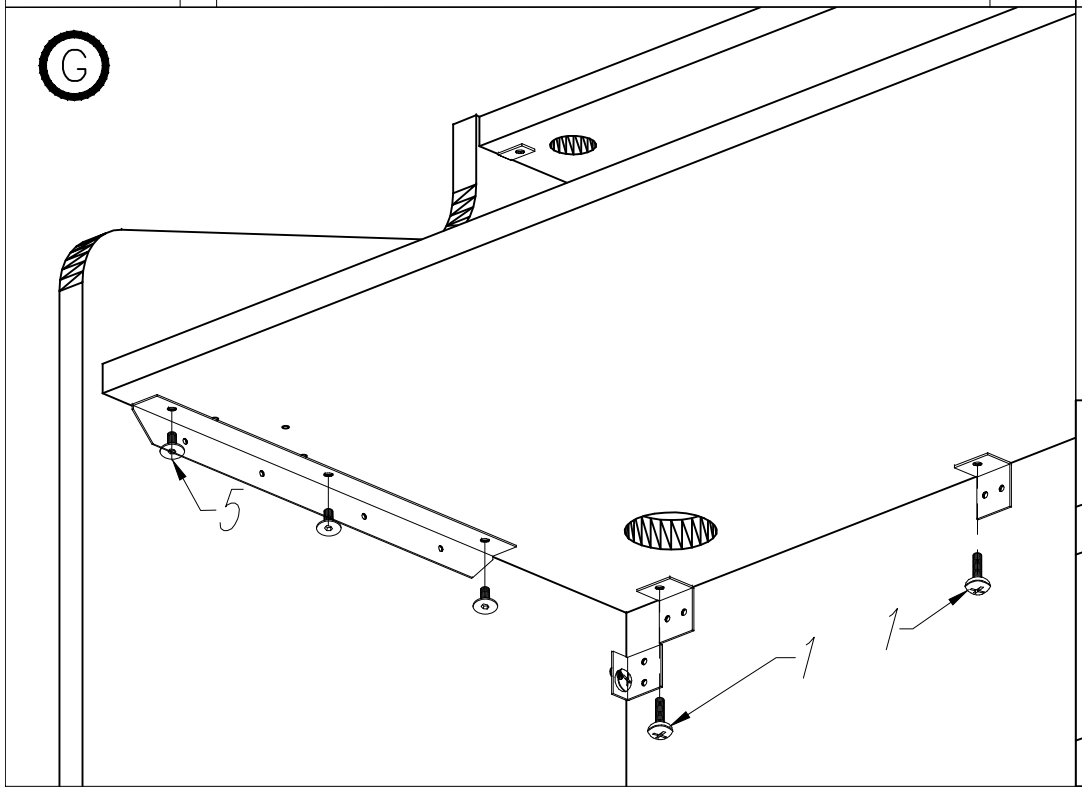
G
5
1
1

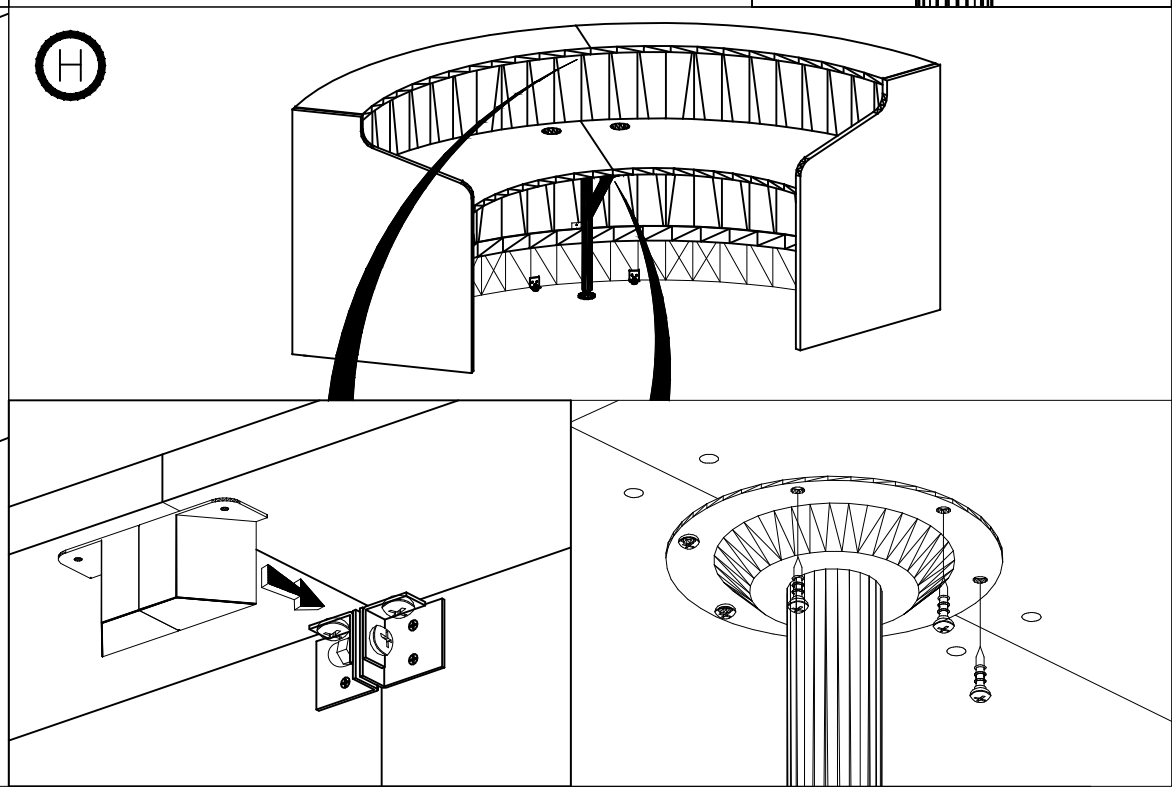
H

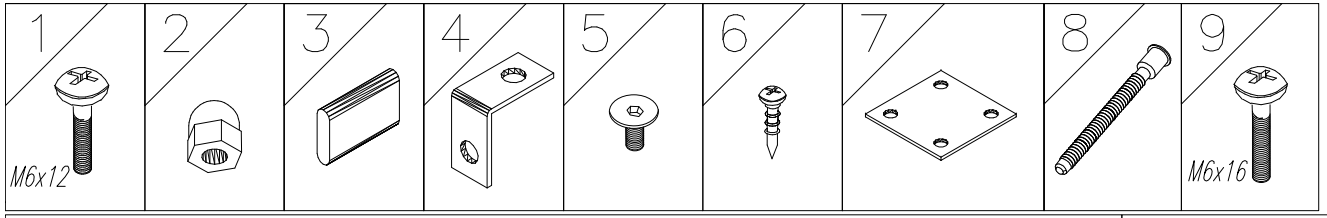

LV...

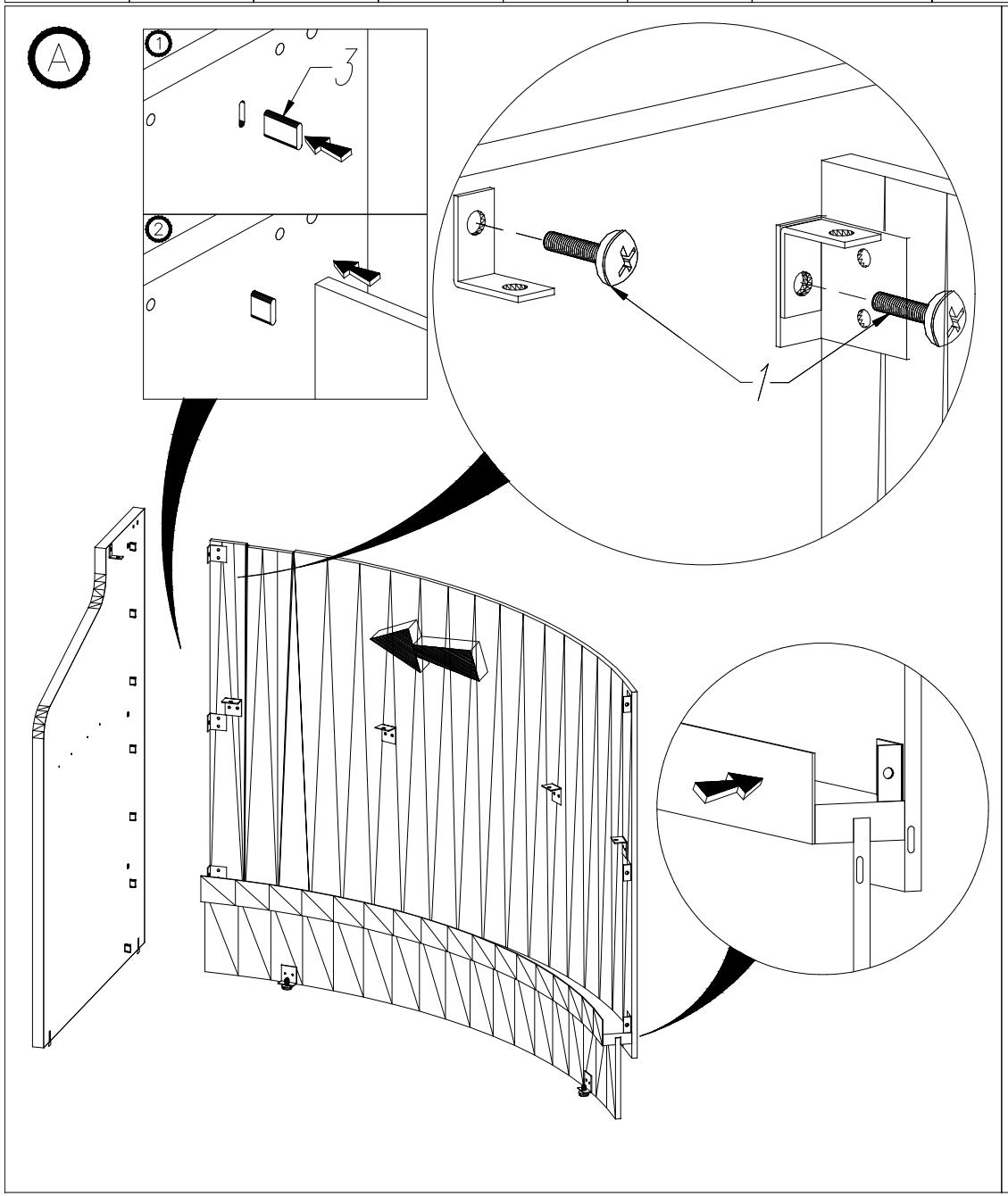

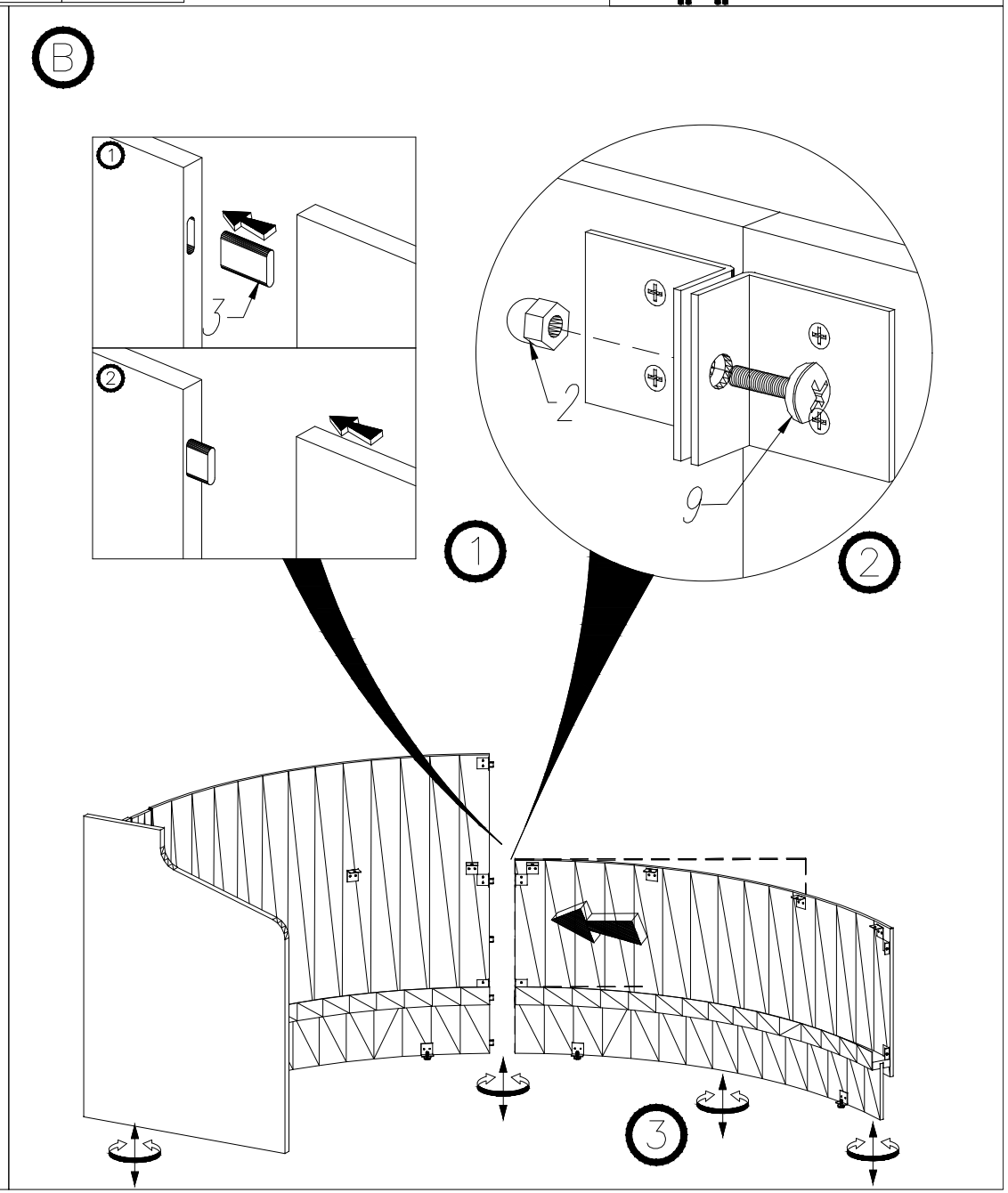

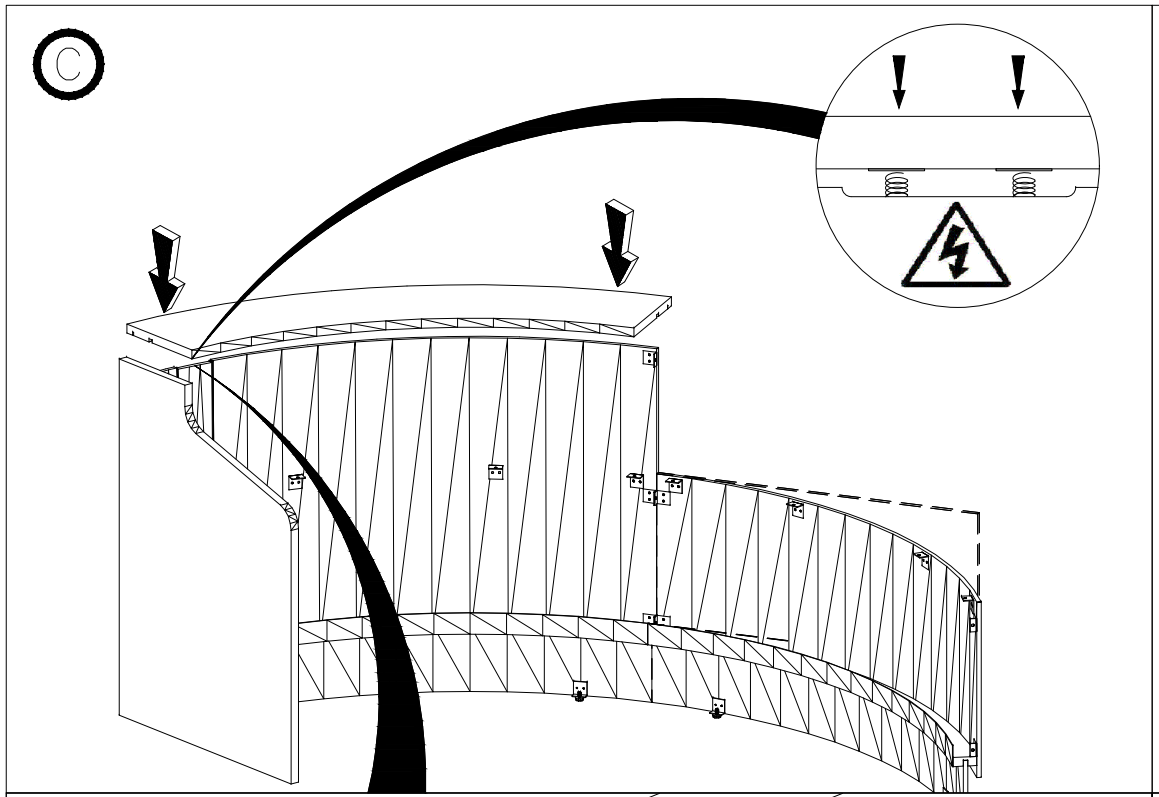
C

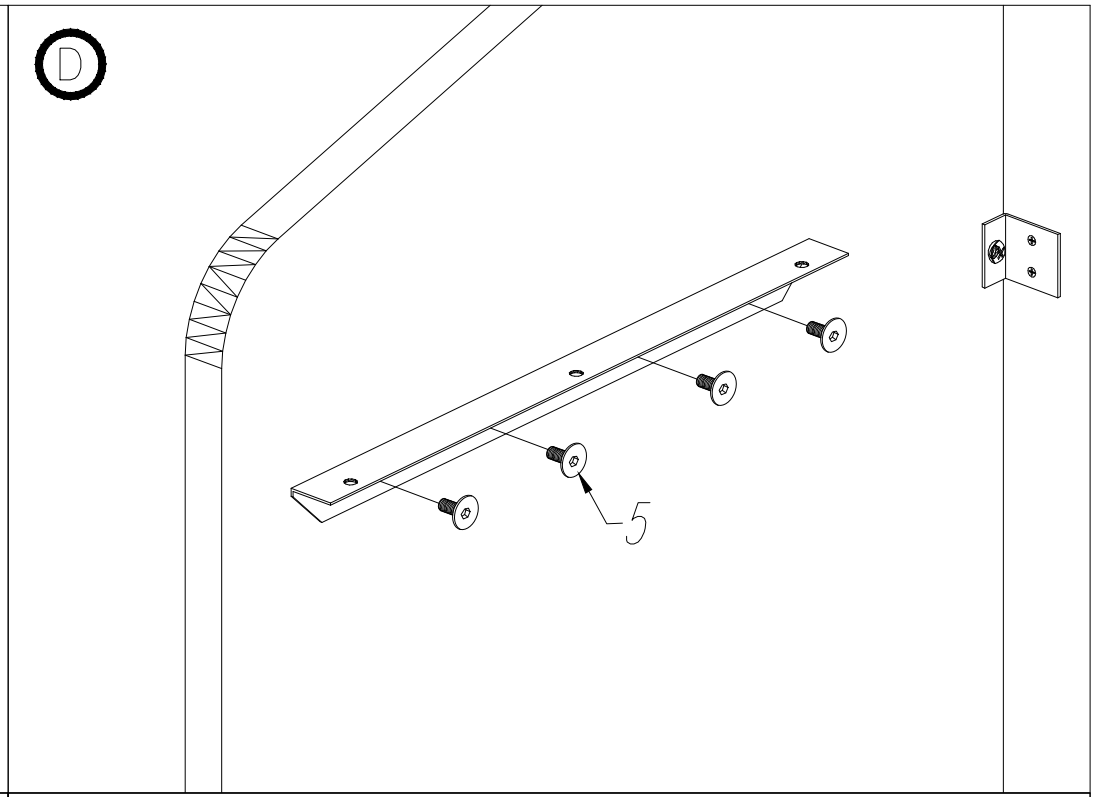
D
5

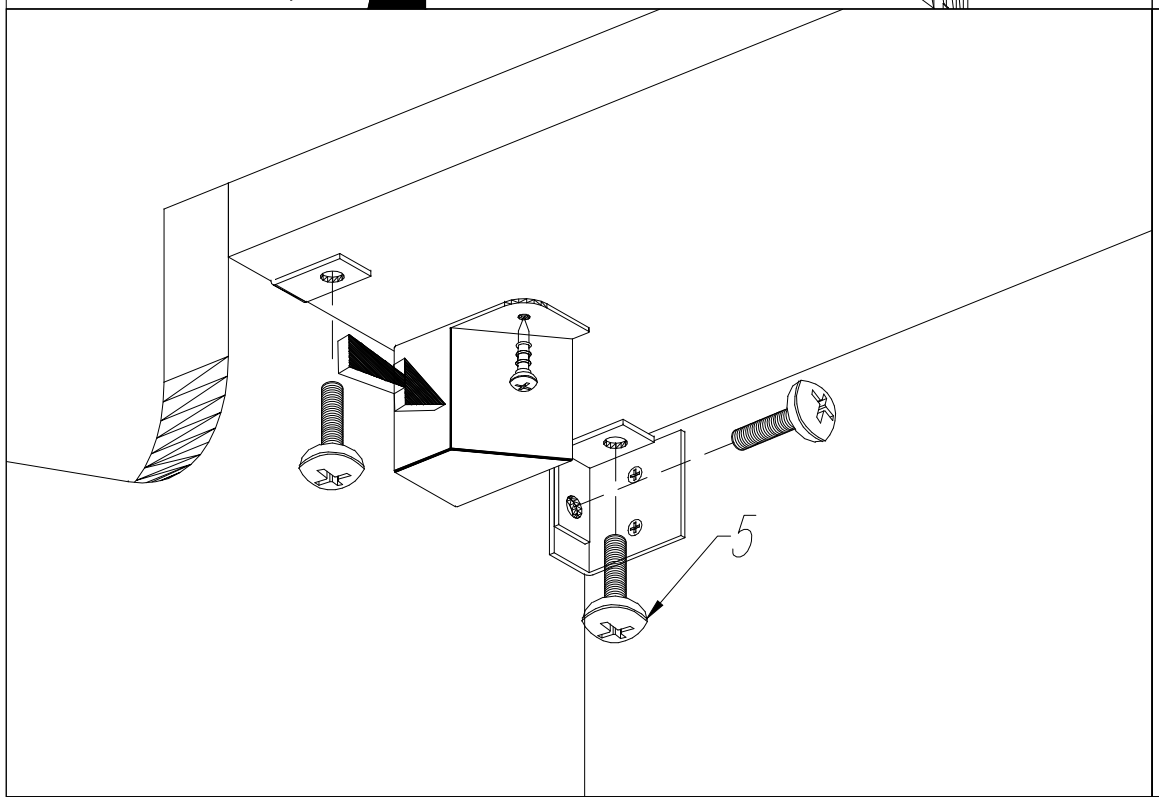
5

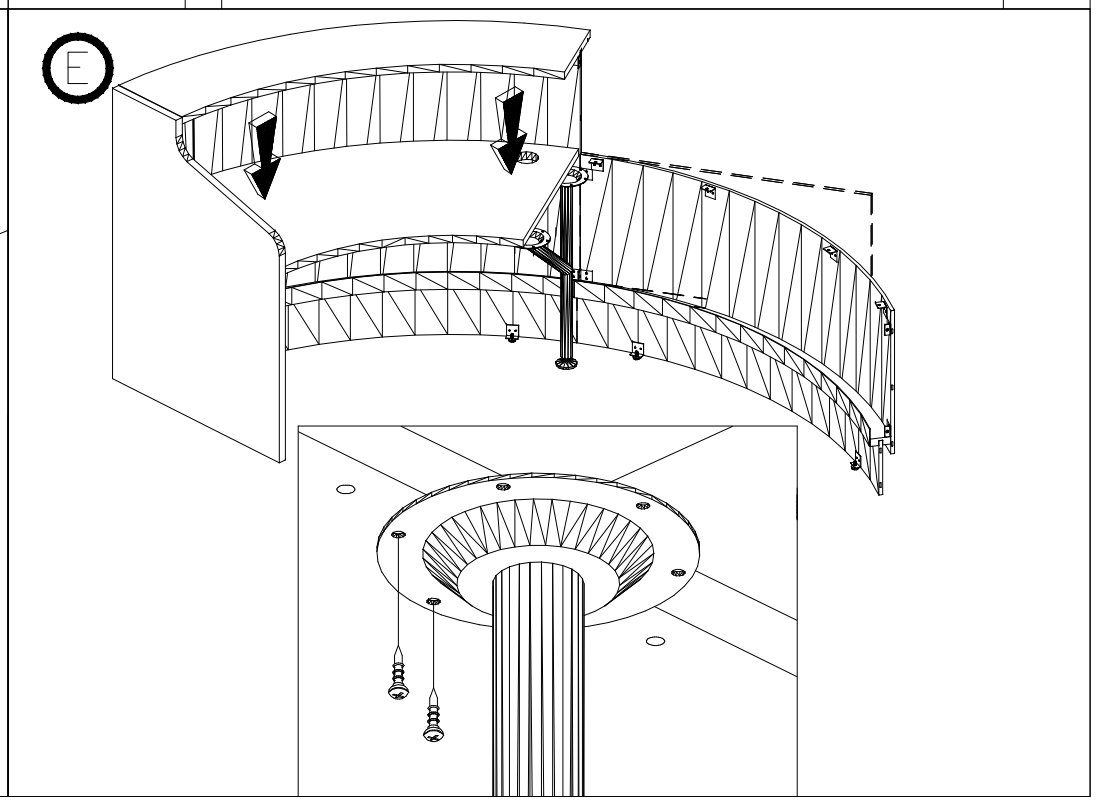
E

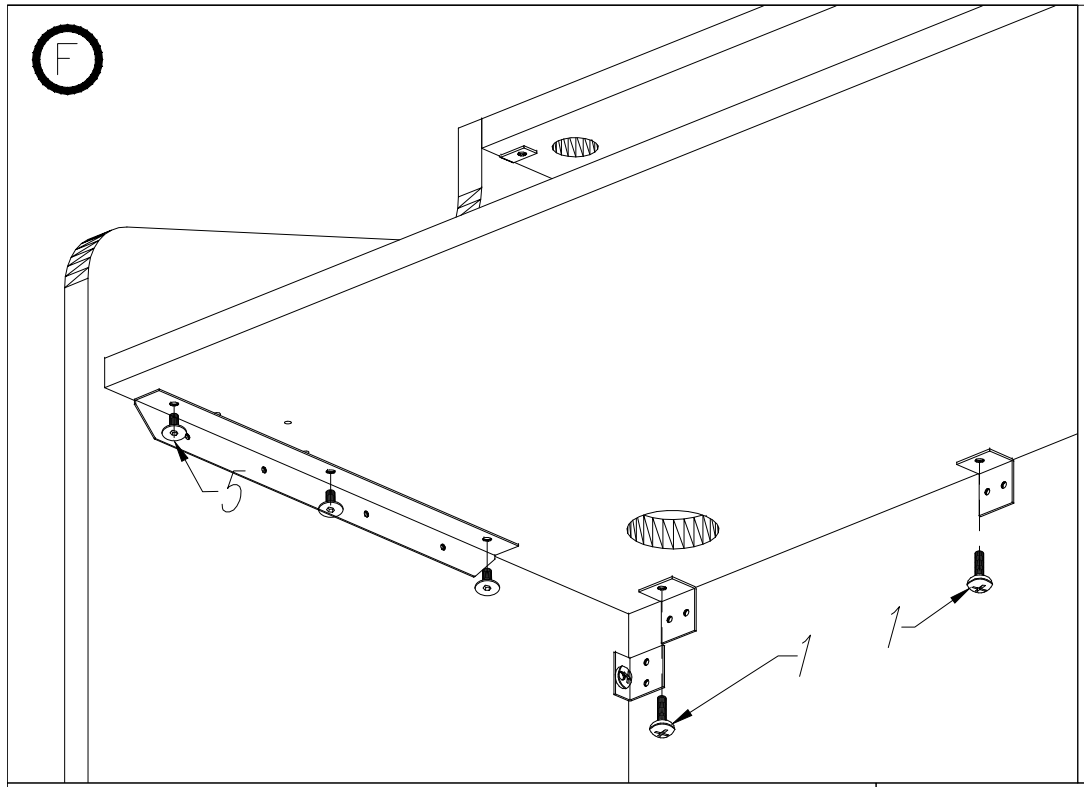
F
5
1
1

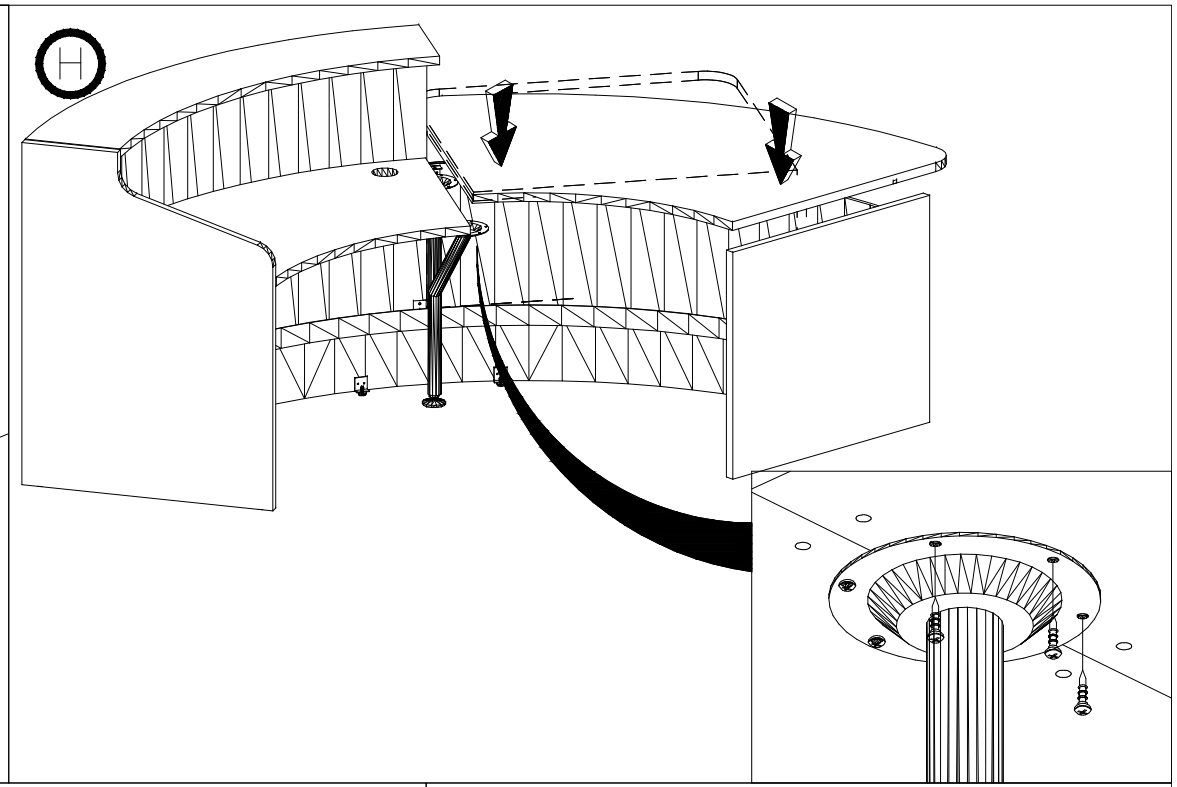
H

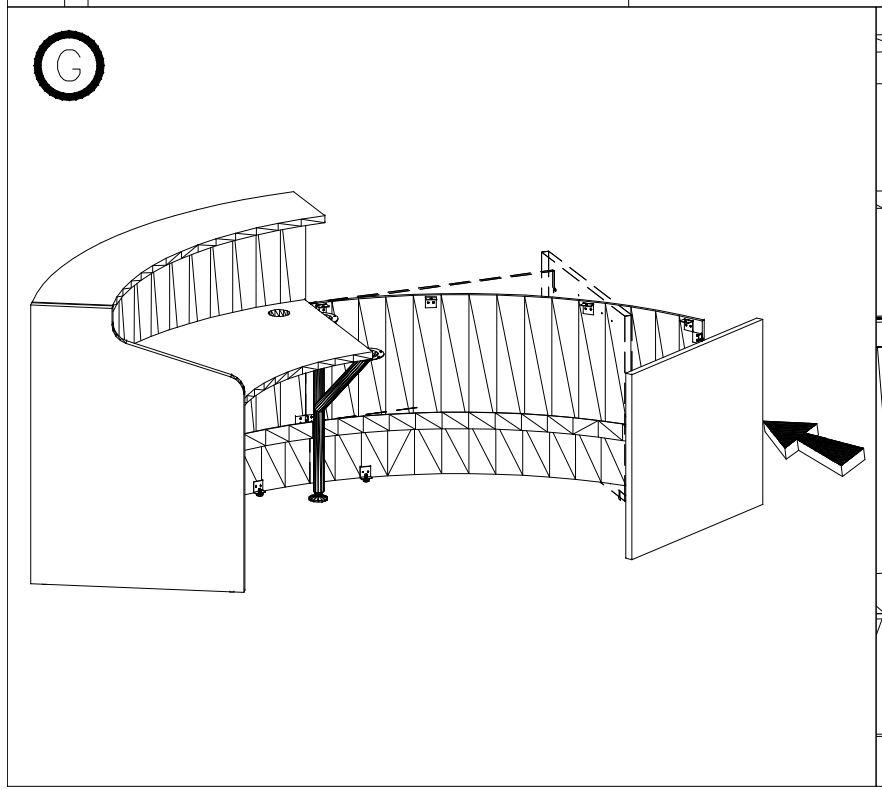
G

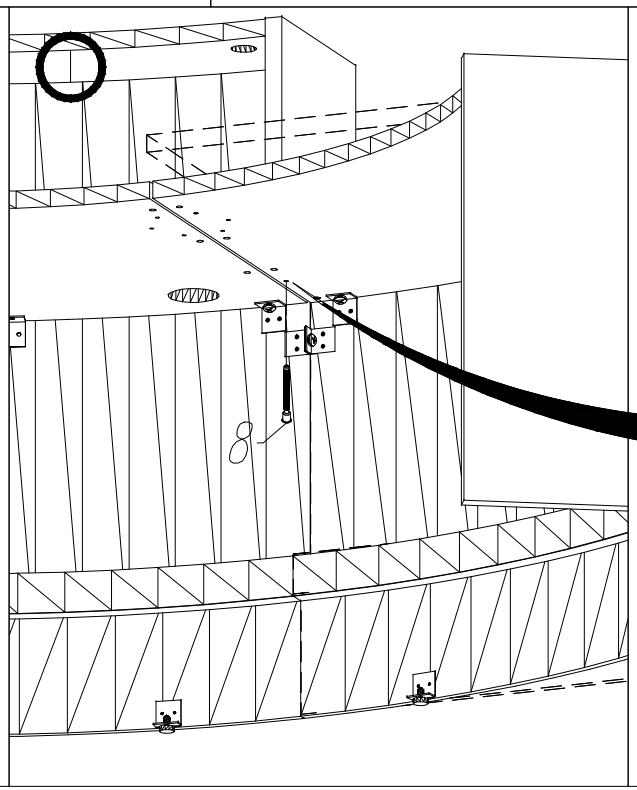
I
8

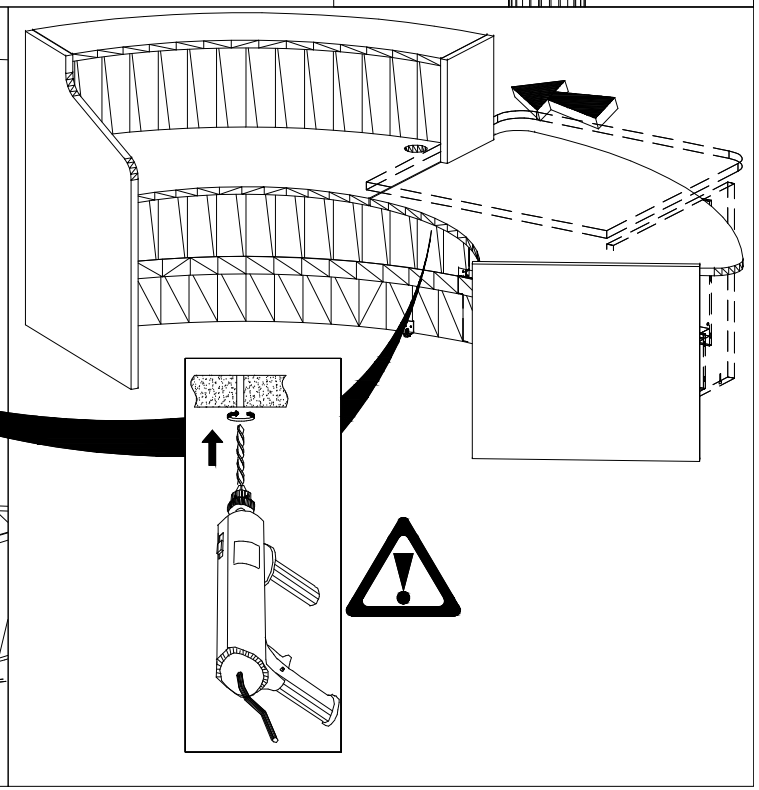

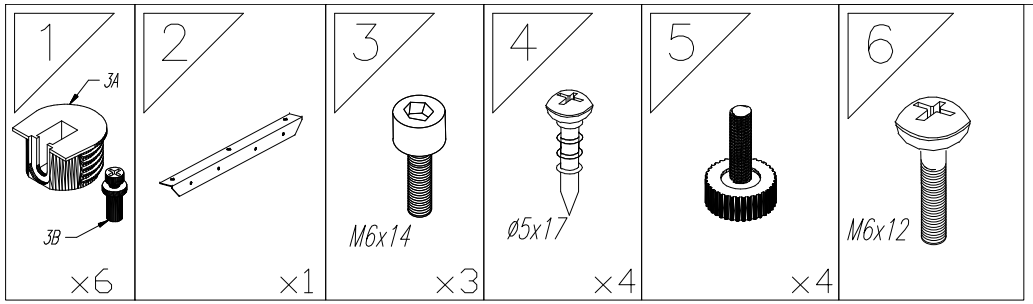

LVP10
LVL10

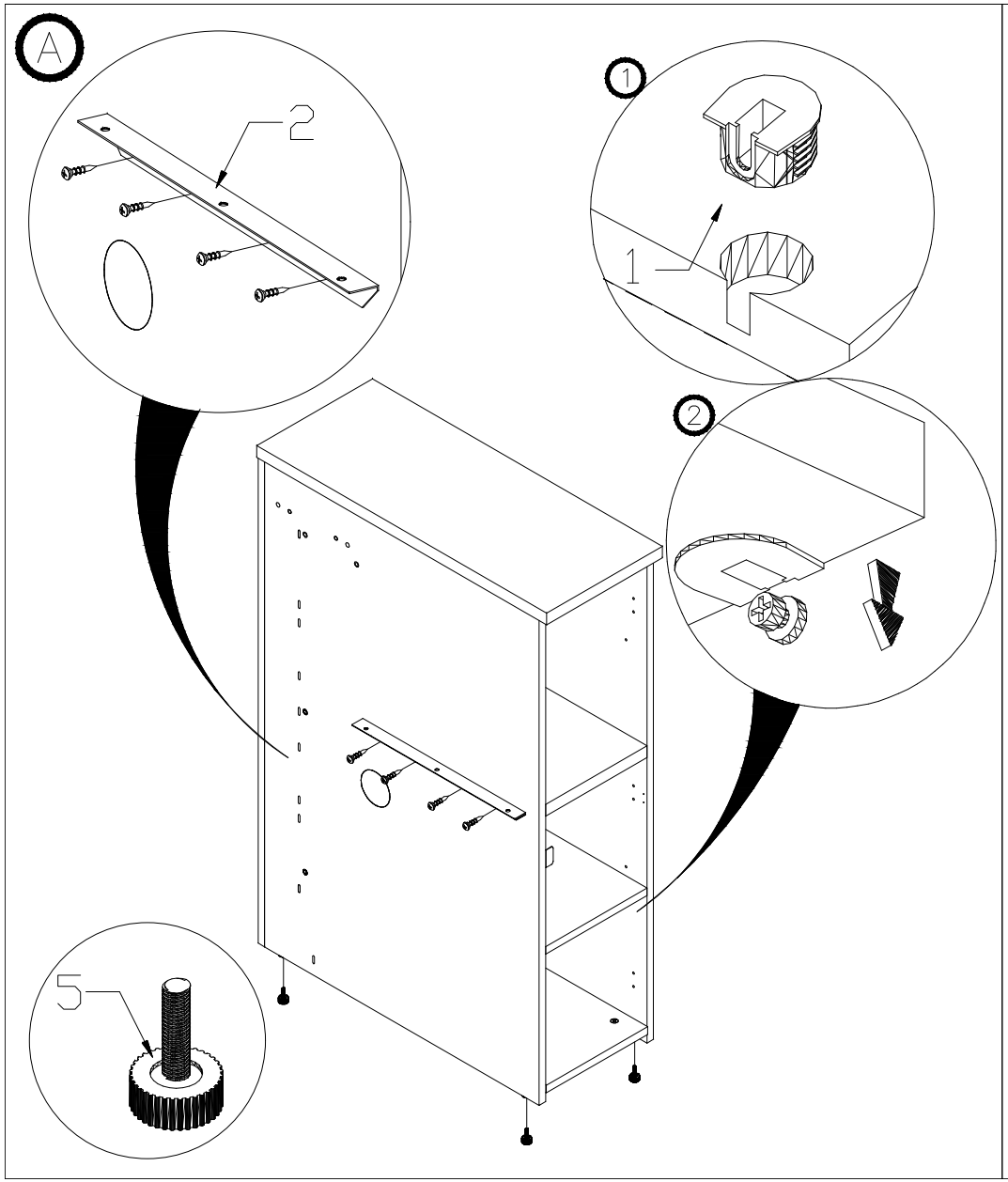

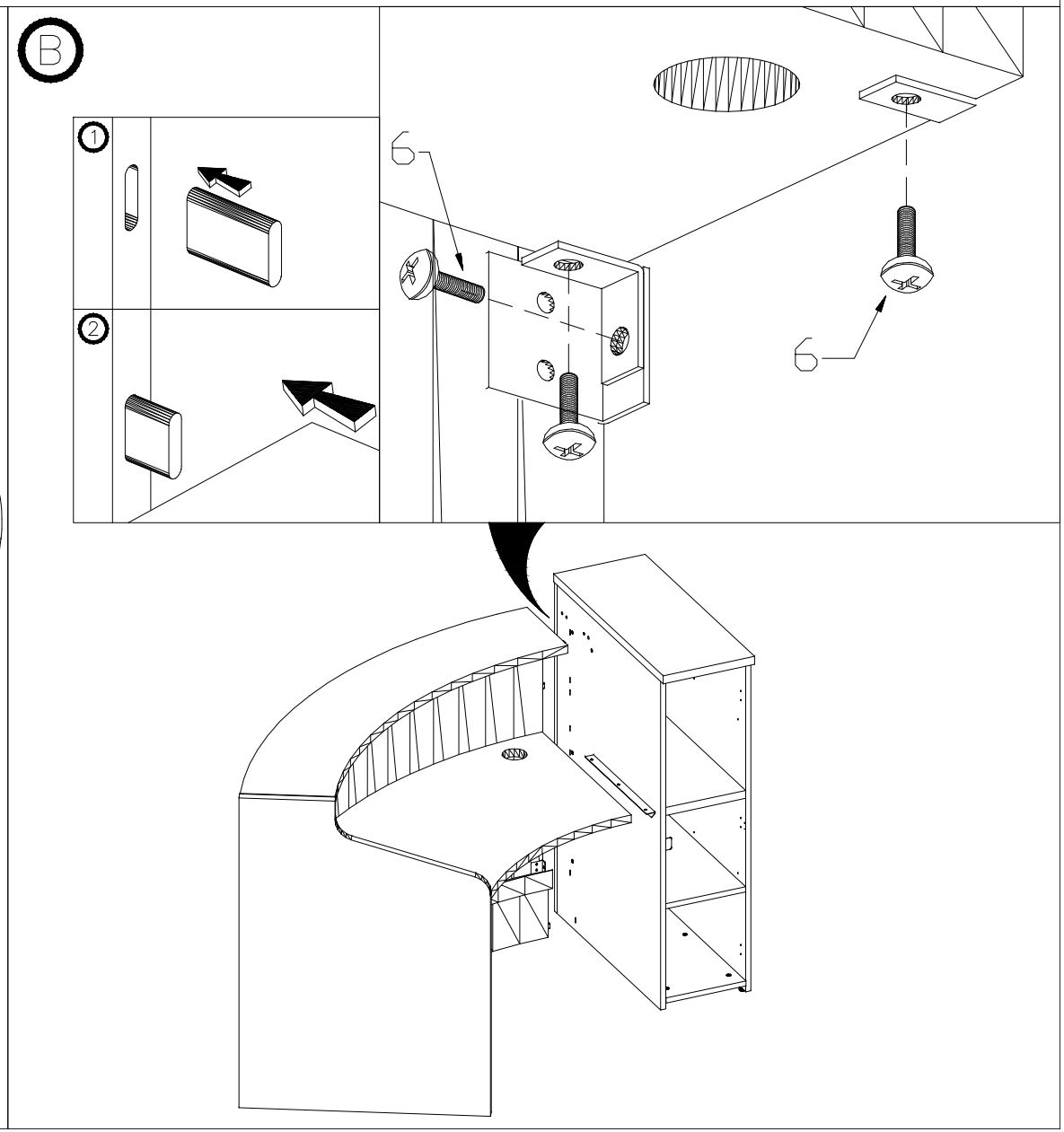

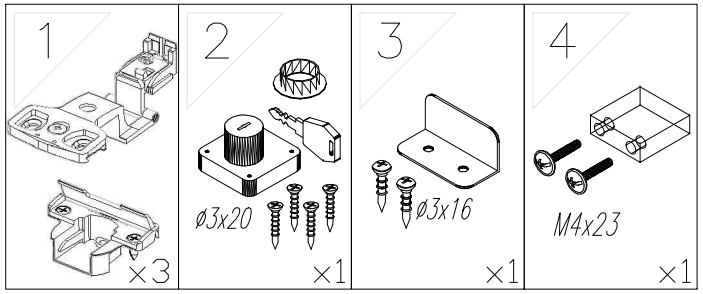

LVD10

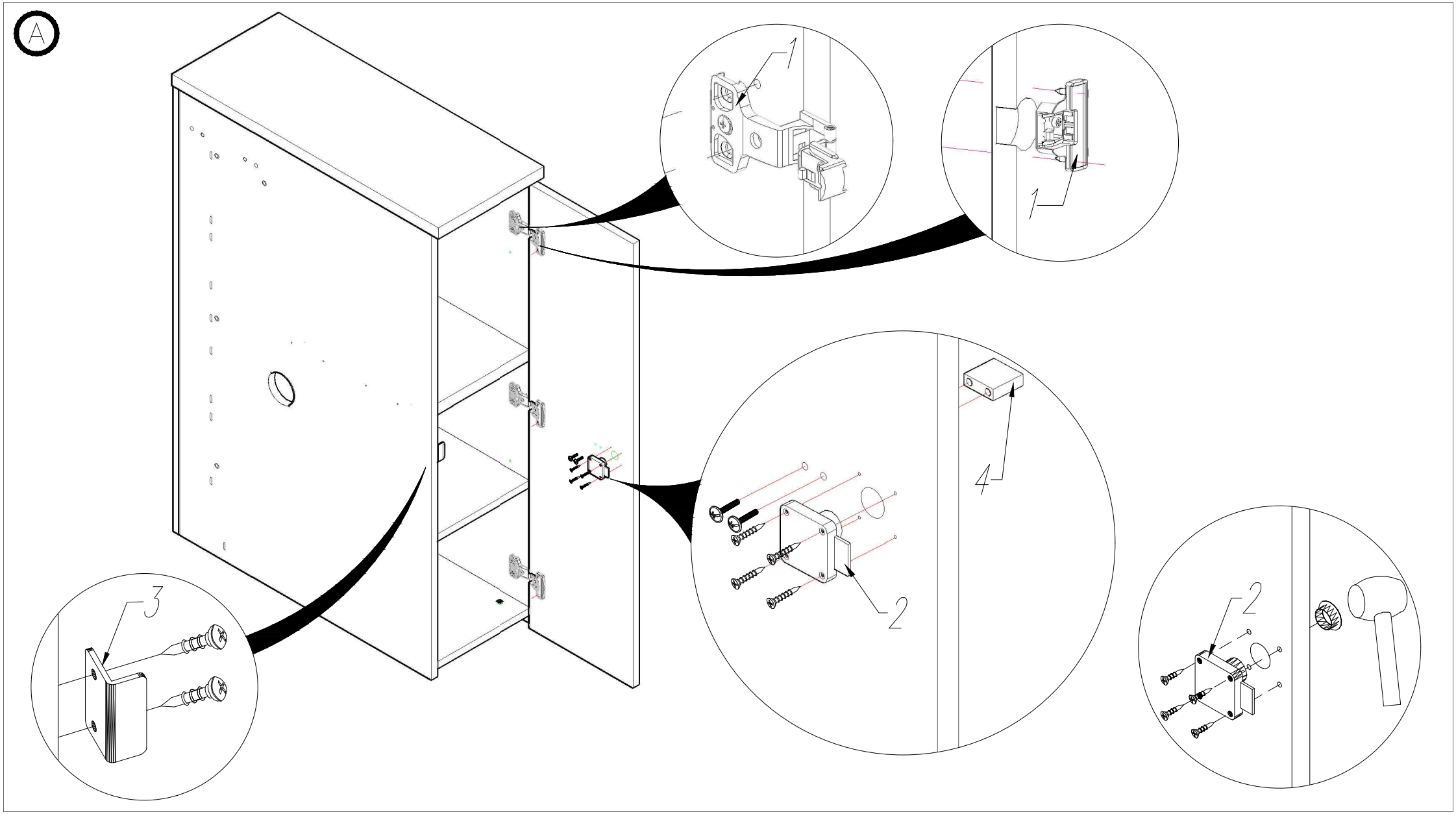

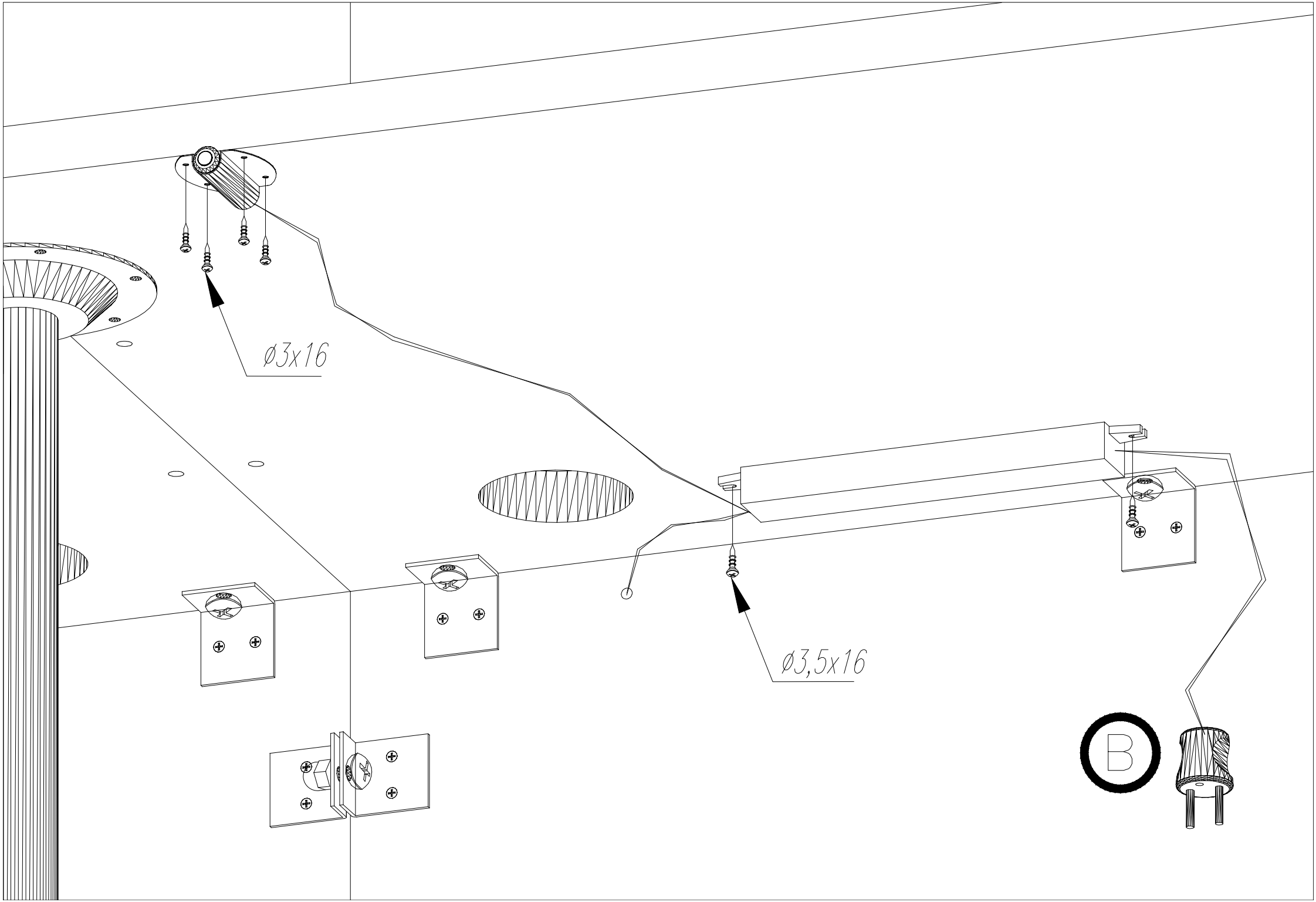
ø3x16
ø3,5x16
B

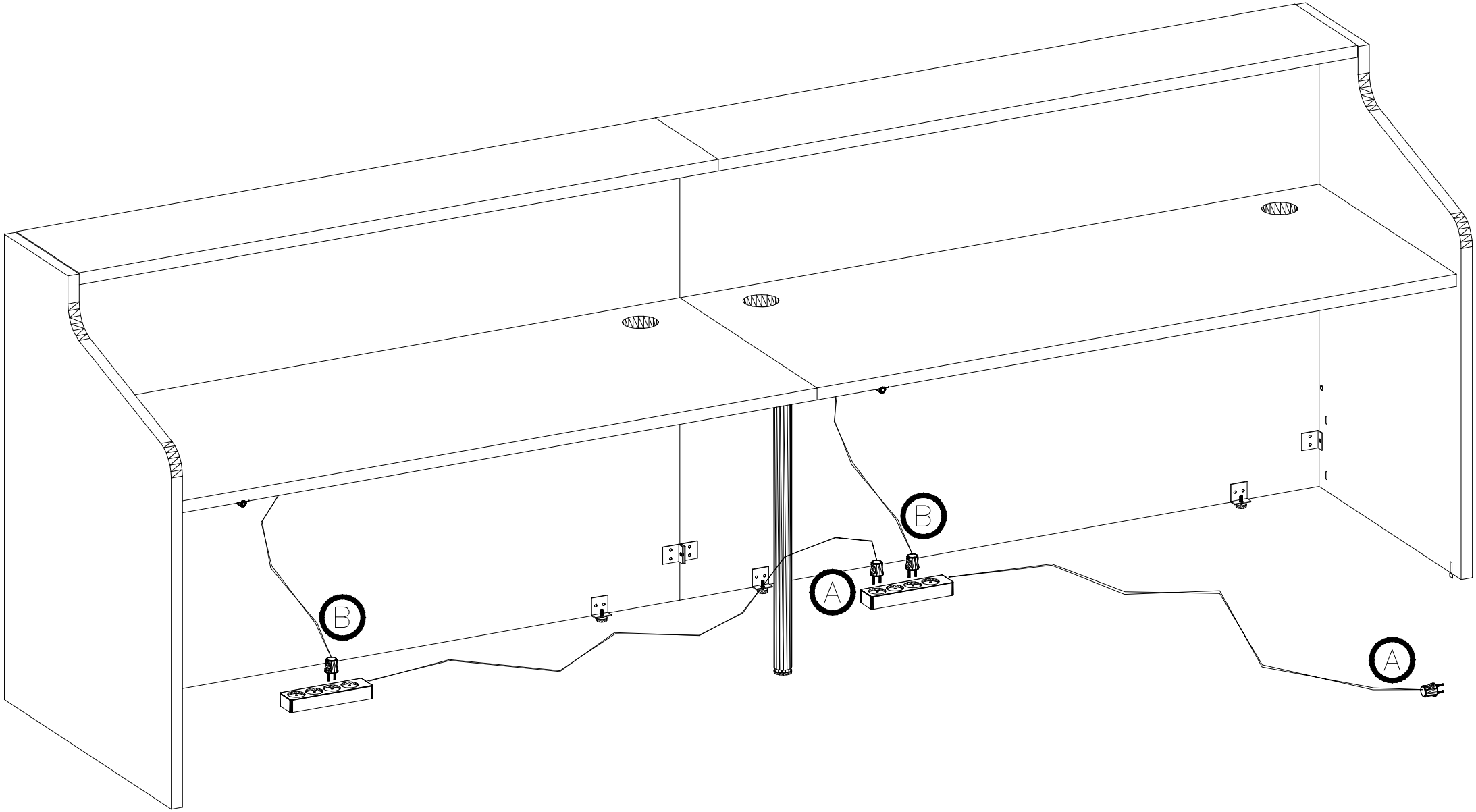
B
B
A
A

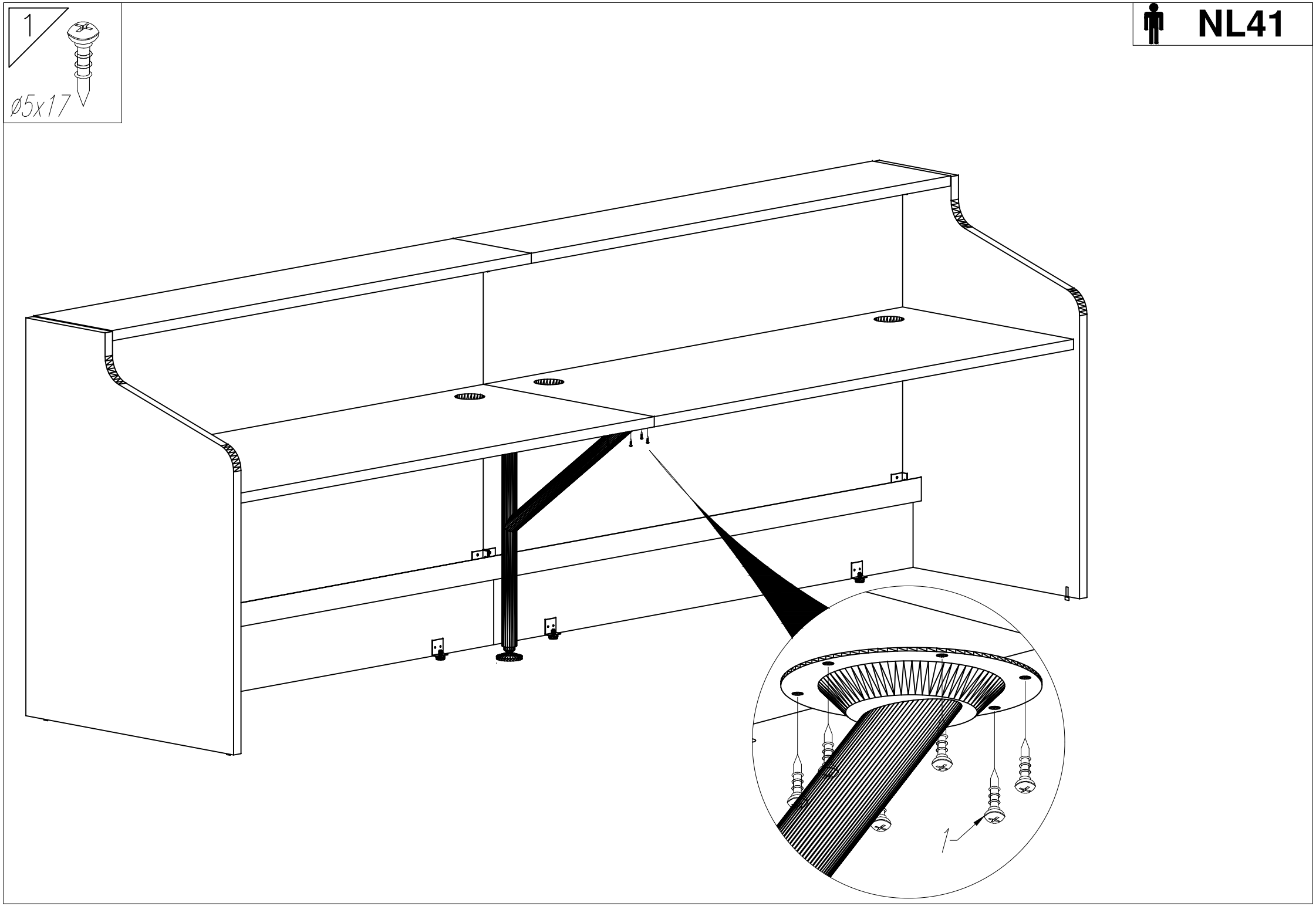
1
ø5x17
NL41
1

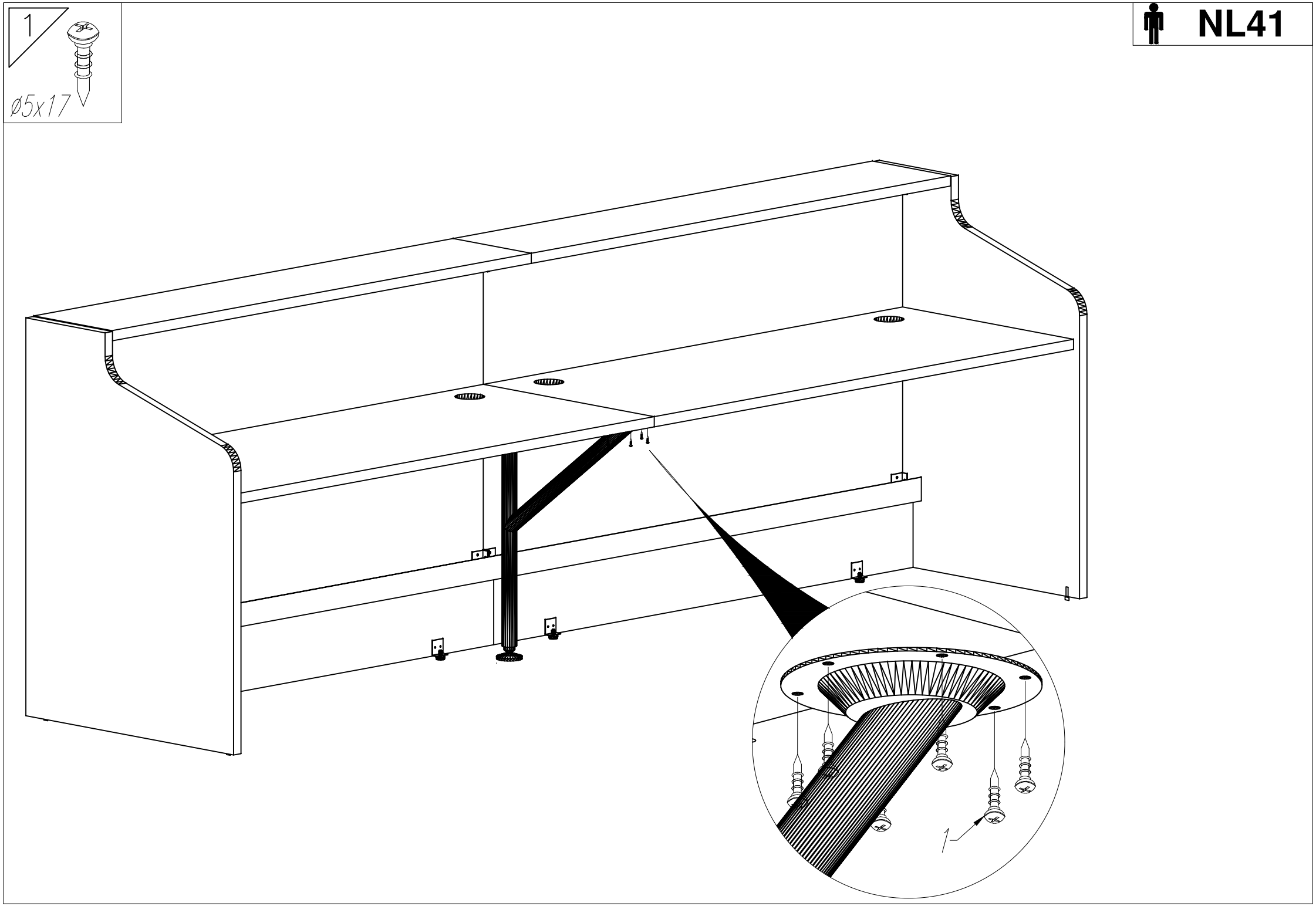
1
ø5x17
NL41
1